NLP 243 Deep Learning for Natural Language Processing

Fall 2023

Sequence-to-Sequence Models and Attention

Outline for Today

- Sequence-to-Sequence Models
- Beam Search
- Sequence-to-Sequence Models for Response Generation
- Limitations of Sequence-to-Sequence Models
- Attention
- Applications of Attention in NLP

Poster Presentation – (Mon 12/11, 4:00-5:30pm)

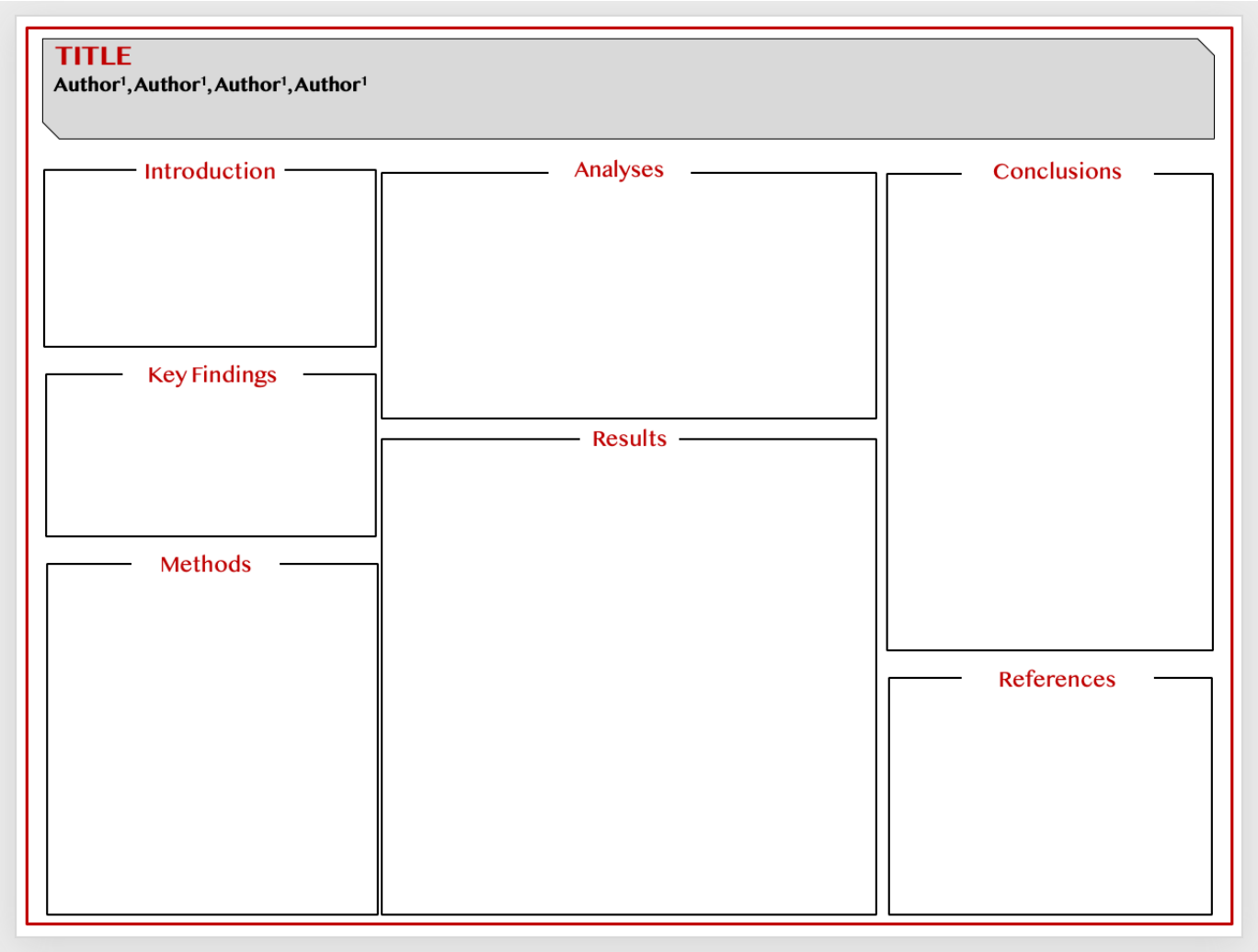

Either:

e-mail poster (PPTX or PDF) to ialane@ucsc.edu by 8:30am on Friday 12/11 to have it printed (earlier is possible)

Or:

Bring your poster to the event

Poster Presentations (information in 11/7 lecture)

- 36” (tall) x 48” (wide)
- Can use provided template or your own
- Ensure font, figures and graphs are large enough to be legible
- Ensure colors aid legibility

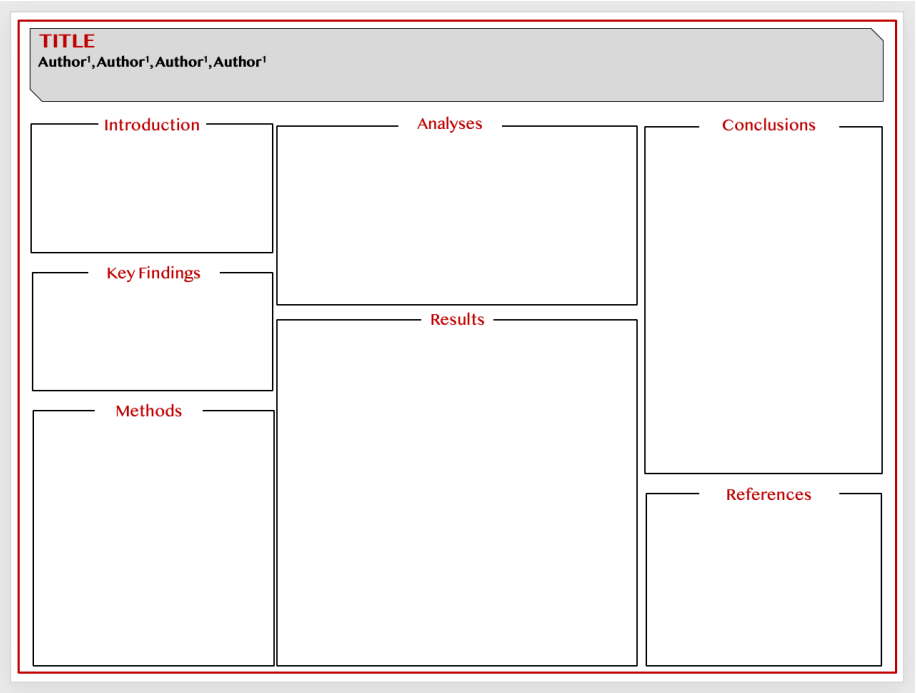

Poster Template:
https://canvas.ucsc.edu/courses/65869/files?preview=8052809

Outline for Today

- Sequence-to-Sequence Models
- Beam Search
- Sequence-to-Sequence Models for Response Generation
- Limitations of Sequence-to-Sequence Models
- Attention
- Applications of Attention in NLP

Encoder-Decoder Architecture

- Composition of two models:

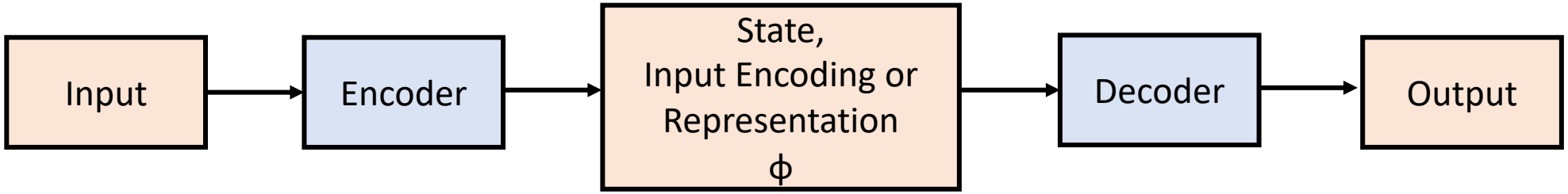

- Encoder aims to capture important information for the task
- ϕ is usually a vector
- Decoder aims to decode the encoded input to target output
- Trained jointly

S2S Learning with Neural Networks (cont.)

- For NL sequences, the encoder and decoder could both be RNNs

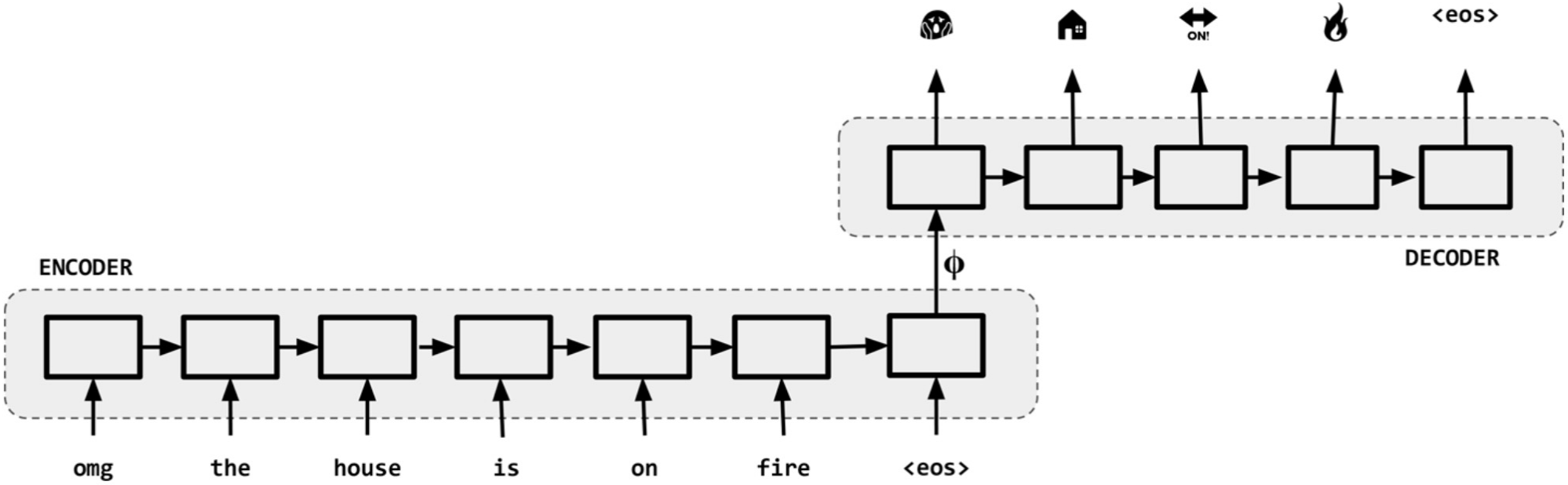

S2S Learning with Neural Networks: The Encoder

- Input: $x_1,\ldots,x_T$ where x_t is the tth word
- The transformation of the RNN's hidden states, denoted by f: $\mathbf{h}_t = f(\mathbf{x}_t, \mathbf{h}_{t-1})$
- The encoder captures information and encodes it into the context vector ϕ with a function q: $\phi = q(\mathbf{h}_1,\ldots,\mathbf{h}_T)$

$$q(\mathbf{h}_1,\ldots,\mathbf{h}_T) = \mathbf{h}_T$$

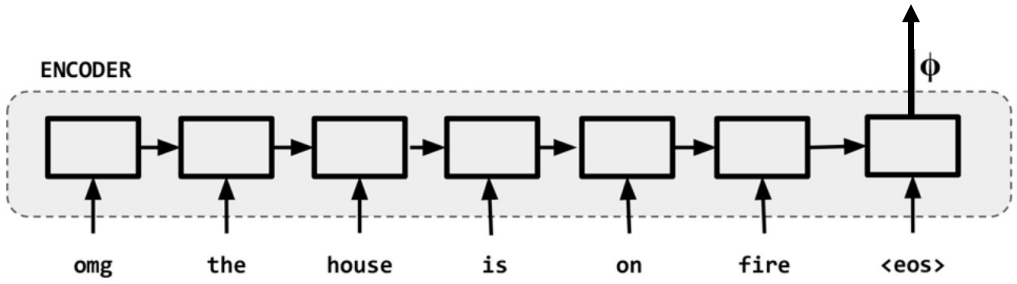

S2S Learning with Neural Networks: The Decoder

- The context vector, ϕ, encodes the information from the complete input sequence $x_1,\ldots,x_T$.
- If given outputs in the training set are $y_1,\ldots,y_{T'}$, at each timestep t',

$$P(y_{t'}|y_1,\ldots,y_{t'-1}, \phi)$$

- Another RNN as decoder, with hidden states s_t

$$\mathbf{s}_{t'}=g(\mathbf{y}_{t'-1}, \phi,\mathbf{s}_{t'-1})$$

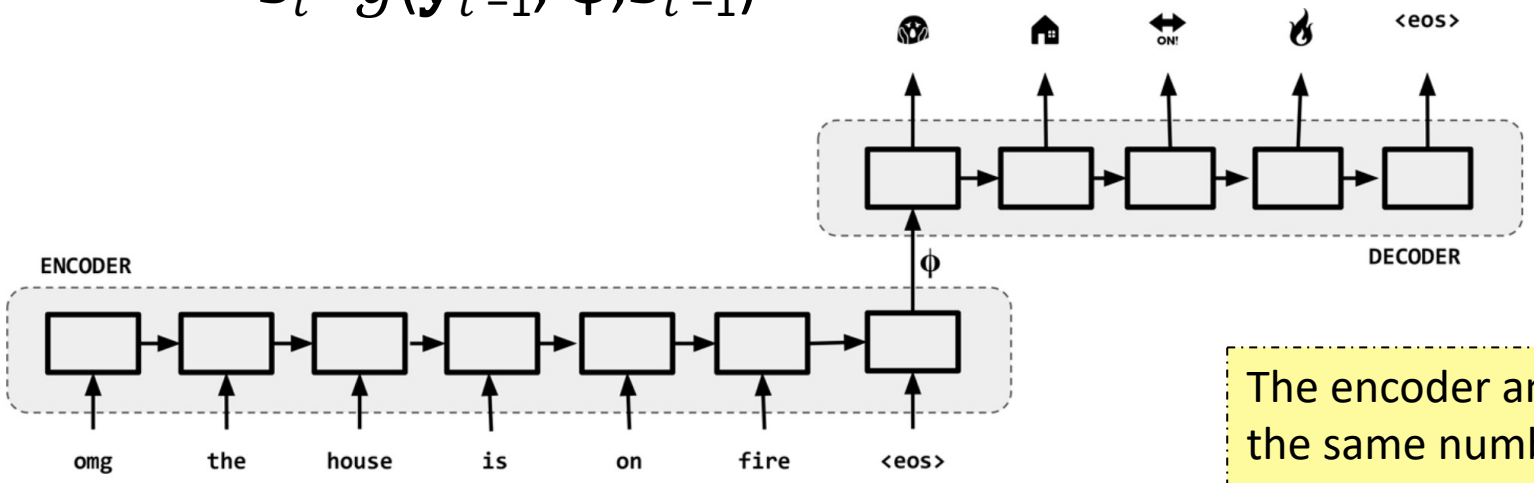

The encoder and decoder RNNs have the same numbers of layers and hidden unit size.

S2S Learning with Neural Networks (cont.)

- Decoder has a dense layer after the RNN layers, where the hidden size is the vocabulary size.
- The dense layer predicts the confidence score for each word.
- We can use softmax on the output scores
- And use cross entropy as the loss.

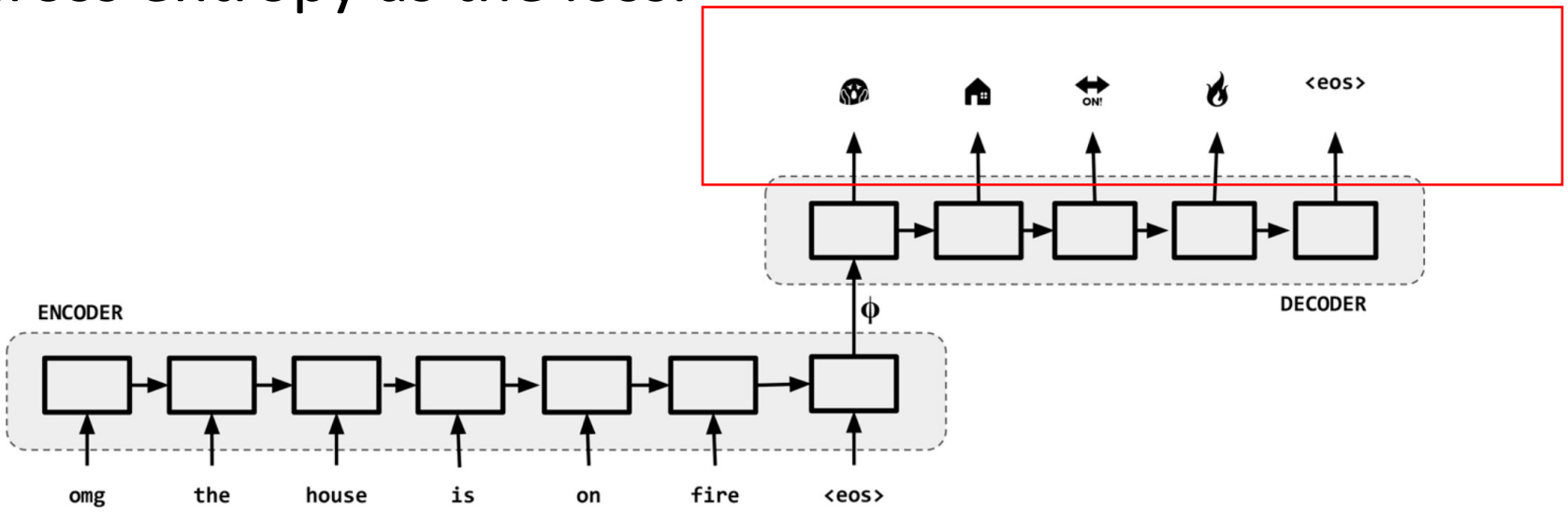

S2S Learning with Neural Networks (cont.)

- Simplest method for predictions, greedy search.

$$y_{t'}=\text{argmax}_{y\in Y}P(y|y_1,\ldots,y_{t'-1},\phi)$$

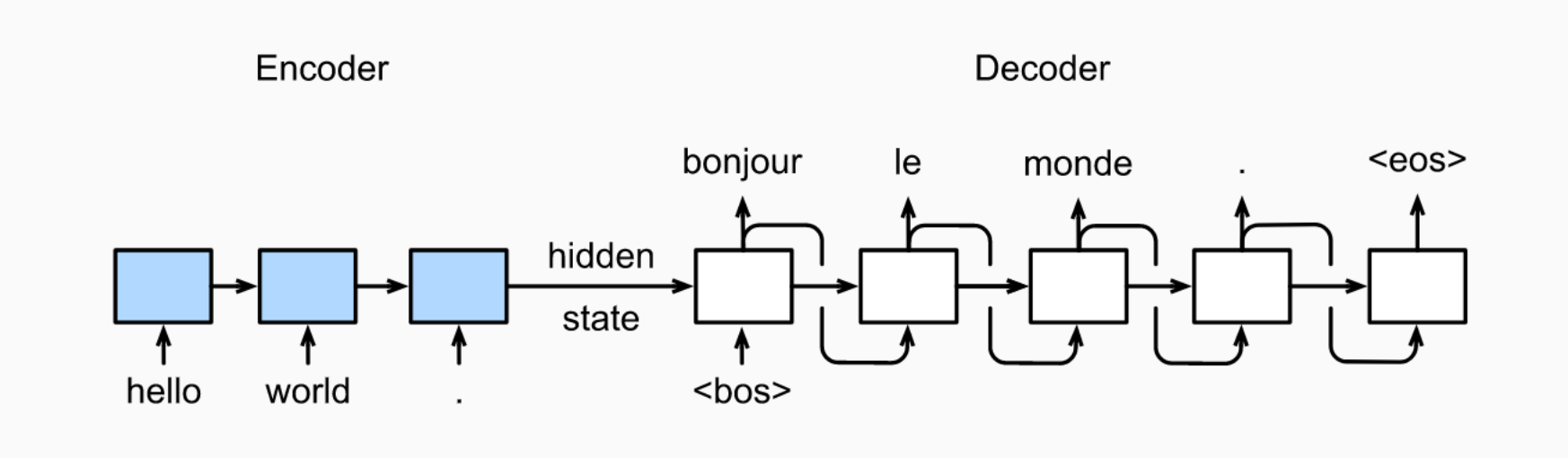

Generate until the "<eos>" symbol is detected, or the output sequence has reached the max length T.

Issue with Greedy Search

- The conditional probability for generating an output sequence

$$\prod^{T'}_{t'=1} P(y_{t'} | y_1, \ldots, y_{t'-1}, \phi)$$

Timestep	1	2	3	4
A	0.5	0.1	0.2	0.0
B	0.2	0.4	0.2	0.2
C	0.2	0.3	0.4	0.2
<eos>	0.1	0.2	0.2	0.6

P("ABC<eos>" | …) = 0.048

Timestep	1	2	3	4
A	0.5	0.1	0.1	0.1
B	0.2	0.4	0.6	0.2
C	0.2	0.3	0.2	0.1
<eos>	0.1	0.2	0.1	0.6

P("ACB<eos>" | …) = 0.054

No guarantee that optimal sequence will be obtained with greedy search!

Exhaustive Search

- Examination of all possible sequences.
- Computational overhead: O($|Y|^{T'}$)
- For example, if $|Y|$=10000 and T'=10, we will need to evaluate $10000^{10} = 10^{40}$ sequences

Exhaustive search is too expensive even with small vocabulary sizes!

Outline for Today

- Sequence-to-Sequence Models
- Beam Search
- Sequence-to-Sequence Models for Response Generation
- Limitations of Sequence-to-Sequence Models
- Attention
- Applications of Attention in NLP

Beam Search

- Beam-size = k
- At time step 1, select top k candidates
- For each subsequent timestep:
  - Determine the $k|Y|$ possible output sequences based on the k candidate output sequences from the previous timestep
  - select the top k output sequences with the highest conditional probability amongst those.

Beam Search (cont.)

k=2

Timestep 1
Candidates

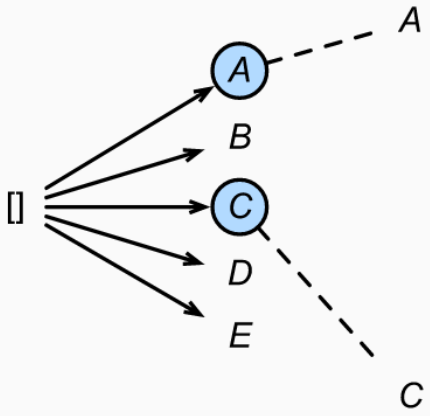

Beam Search (cont.)

k=2

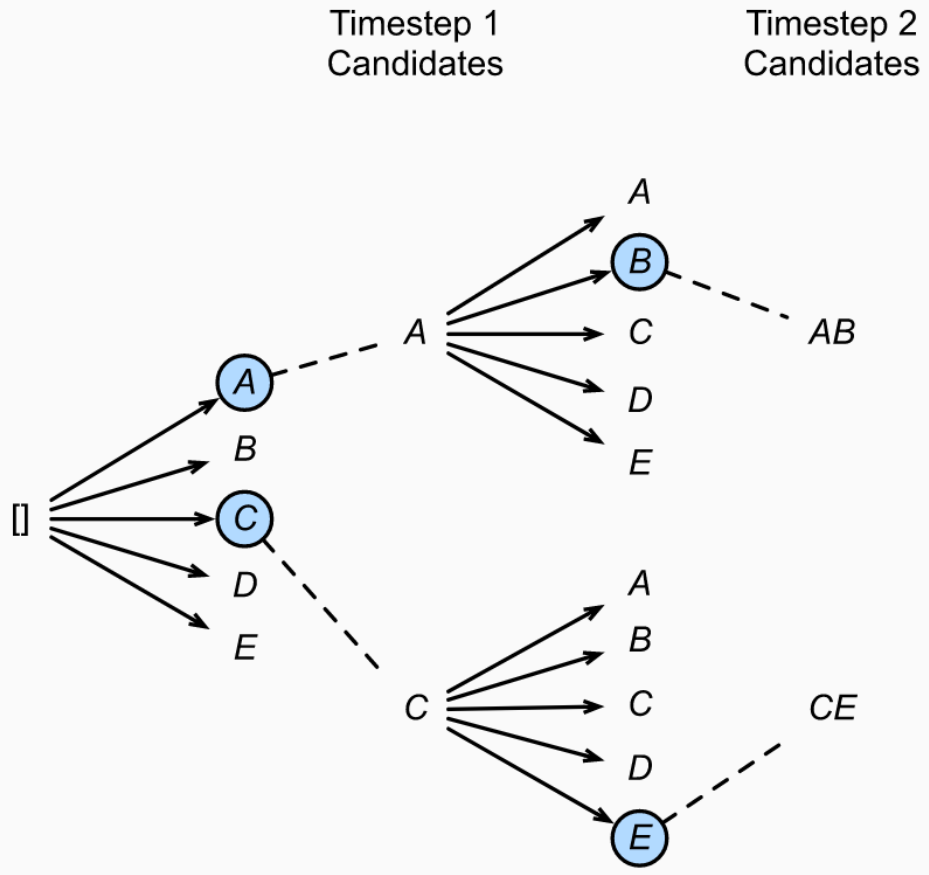

Beam Search (cont.)

k=2

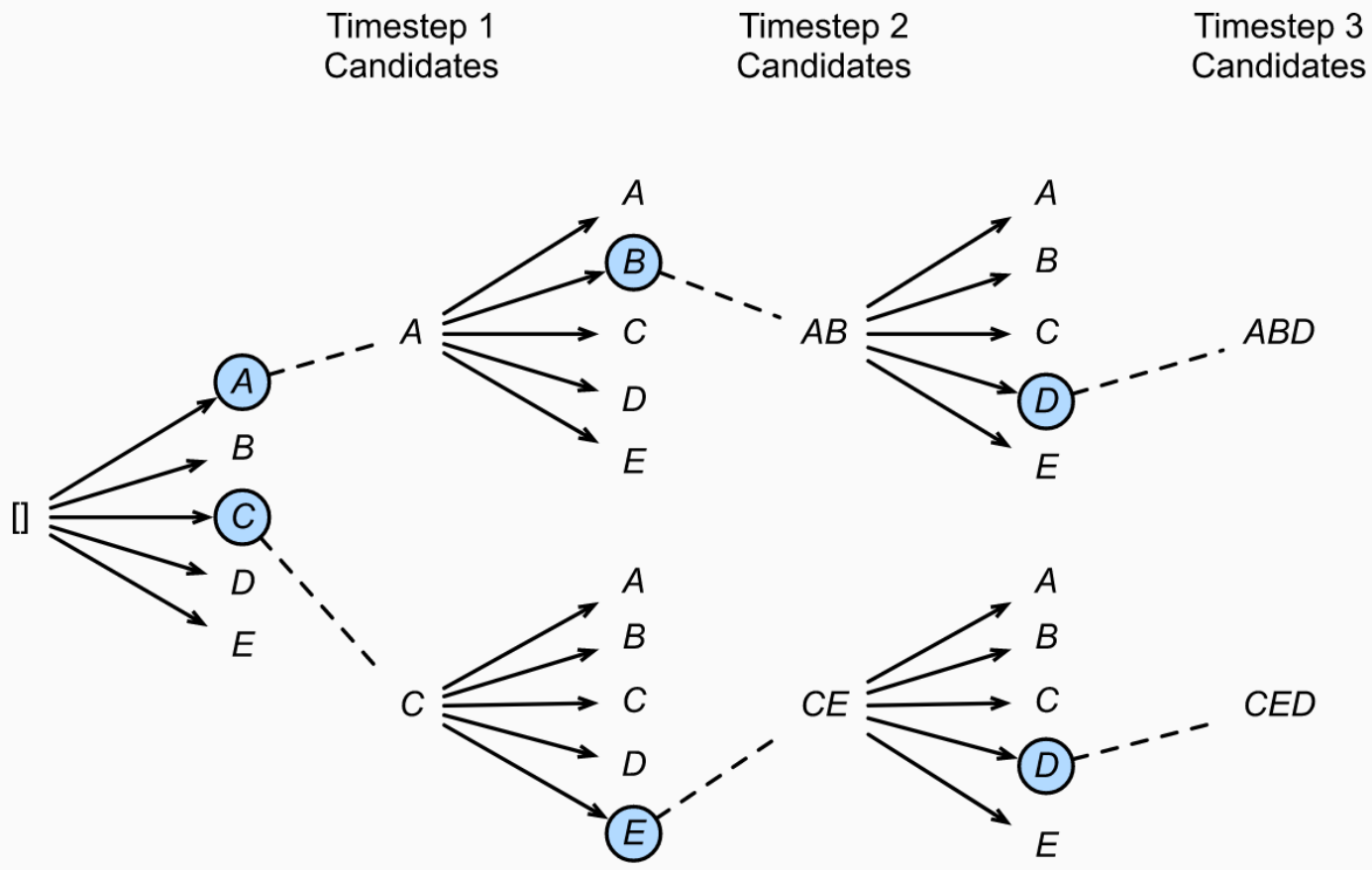

Beam Search (cont.)

- The computational overhead of beam search is between greedy search and exhaustive search.
- Greedy search can be treated as a beam search with a beam size of 1.
- Beam search strikes a balance between computational overhead and search quality using a flexible beam size of k.

Outline for Today

- Sequence-to-Sequence Models
- Beam Search
- Sequence-to-Sequence Models for Response Generation
- Limitations of Sequence-to-Sequence Models
- Attention
- Applications of Attention in NLP

Response Generation in E2E Dialogue Systems

- Aim: Learn to generate a response from large conversational datasets.
- Inference time: Given the conversation context, generate a natural and appropriate response.
- Modeled with E2E architectures.

Sequence-to-Sequence Models for RG

Modeling conversations as request-response pairs.

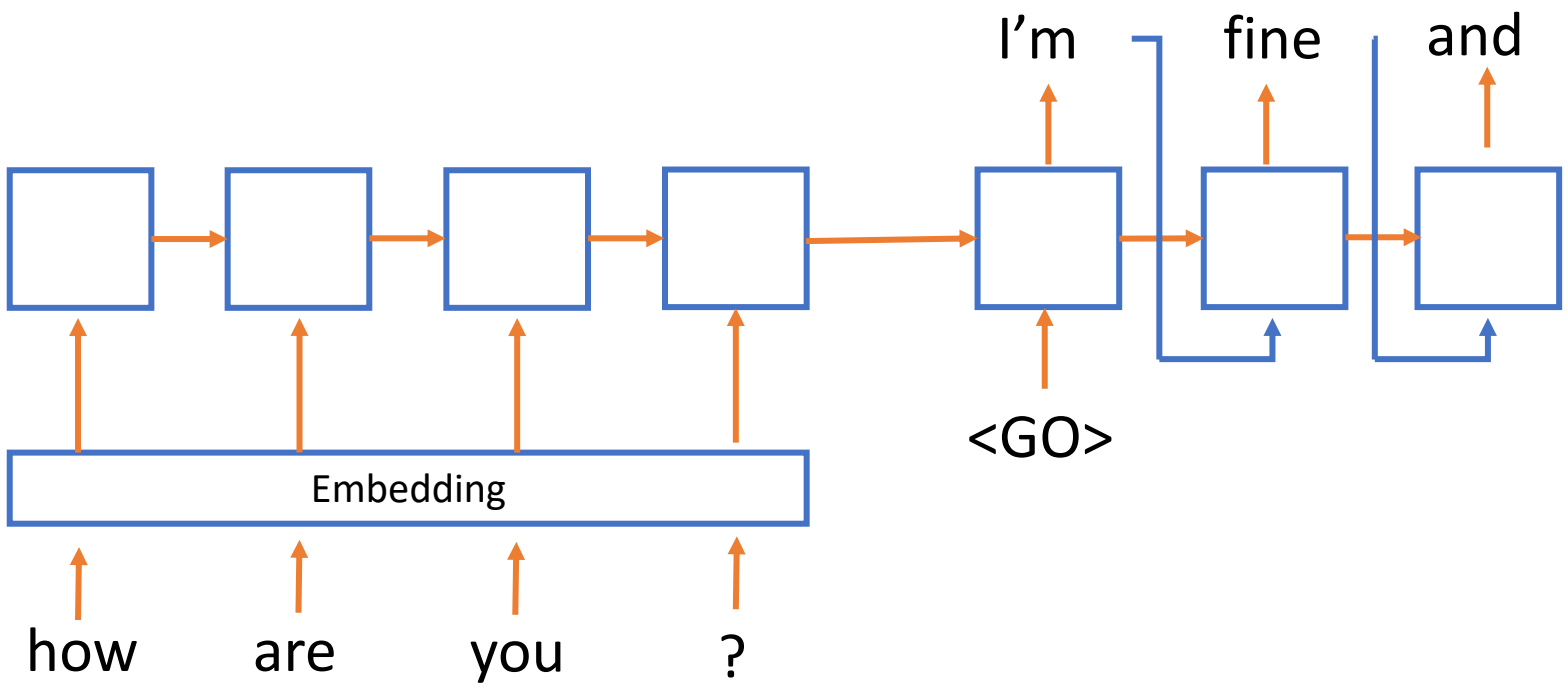

Why is context important?

A: Yeah, me too. My favorite movie is Seven.

Oh, yes, that was a great movie!

I don’t like scary movies. I enjoy documentaries about historical events.

Why is context important for RG?

I love to watch horror movies.

A: Yeah, me too. My favorite movie is Seven.

Oh, yes, that was a great movie!

I don’t like scary movies. I enjoy documentaries about historical events.

Representations of Conversation Context

The complete conversation context can be treated as a long sequence.

U: Hi, how have you been?
S: I am doing great, and you?
U: Good, thanks, I am looking for an interesting movie to see.
S: Deepwater Horizon is showing at Angelika.
U: What else is there?
S: Not sure. Did you know more than 200 million gallons of oil spilled into the Gulf of Mexico during that time?
U: Oh, wow, I didn't know that, I cannot even imagine how much that would be. What are the showtimes?
S: You can see it today at 3:40pm and 5:45pm.

U: "Let's do 3:40"

Representations of Conversation Context

The complete conversation context can be treated as a long sequence.

U: Hi, how have you been?
S: I am doing great, and you?
U: Good, thanks, I am looking for an interesting movie to see.
S: Deepwater Horizon is showing at Angelika.
U: What else is there?
S: Not sure. Did you know more than 200 million gallons of oil spilled into the Gulf of Mexico during that time?
U: Oh, wow, I didn't know that, I cannot even imagine how much that would be. What are the showtimes?
S: You can see it today at 3:40pm and 5:45pm.

It could also be limited length window, defined by # of words / characters.

U: "Let's do 3:40"

Representations of Conversation Context

U: "i d like to purchase tickets to see deepwater horizon"

S: "for which theatre"

U: "angelika"

S: "you want them for angelika theatre?"

U: "yes angelika"

S: "how many tickets would you like ?"

U: "3 tickets for saturday"

S: "What time would you like ?"

U: "Any time on saturday is fine"

S: "okay , there is 4:10 pm , 5:40 pm and 9:20 pm"

U: "Let's do 5:40"

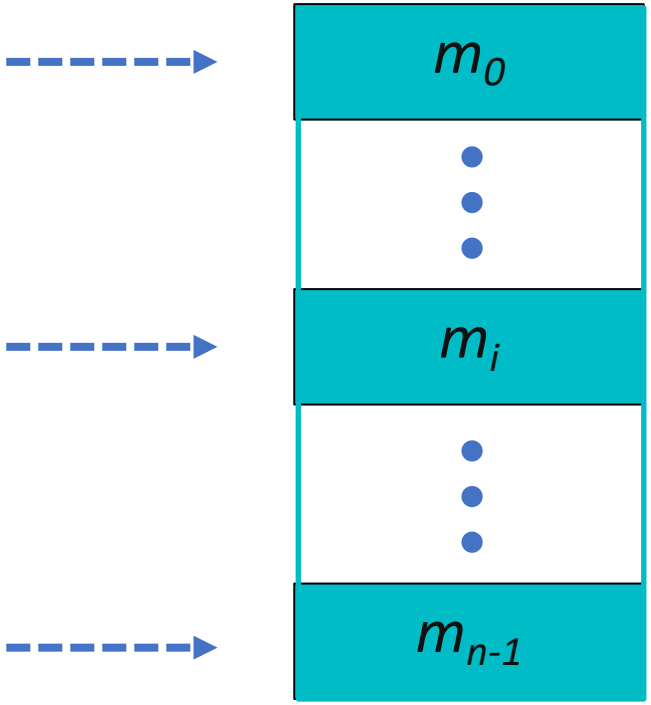

Representations of Conversation Context

Hierarchal recurrent neural networks

1. Sentence Encoding

$$m_t = RNN_1(x_t)$$

2. Context Encoding

$$c_t = f(c_{t-1}, m_{t-1})$$

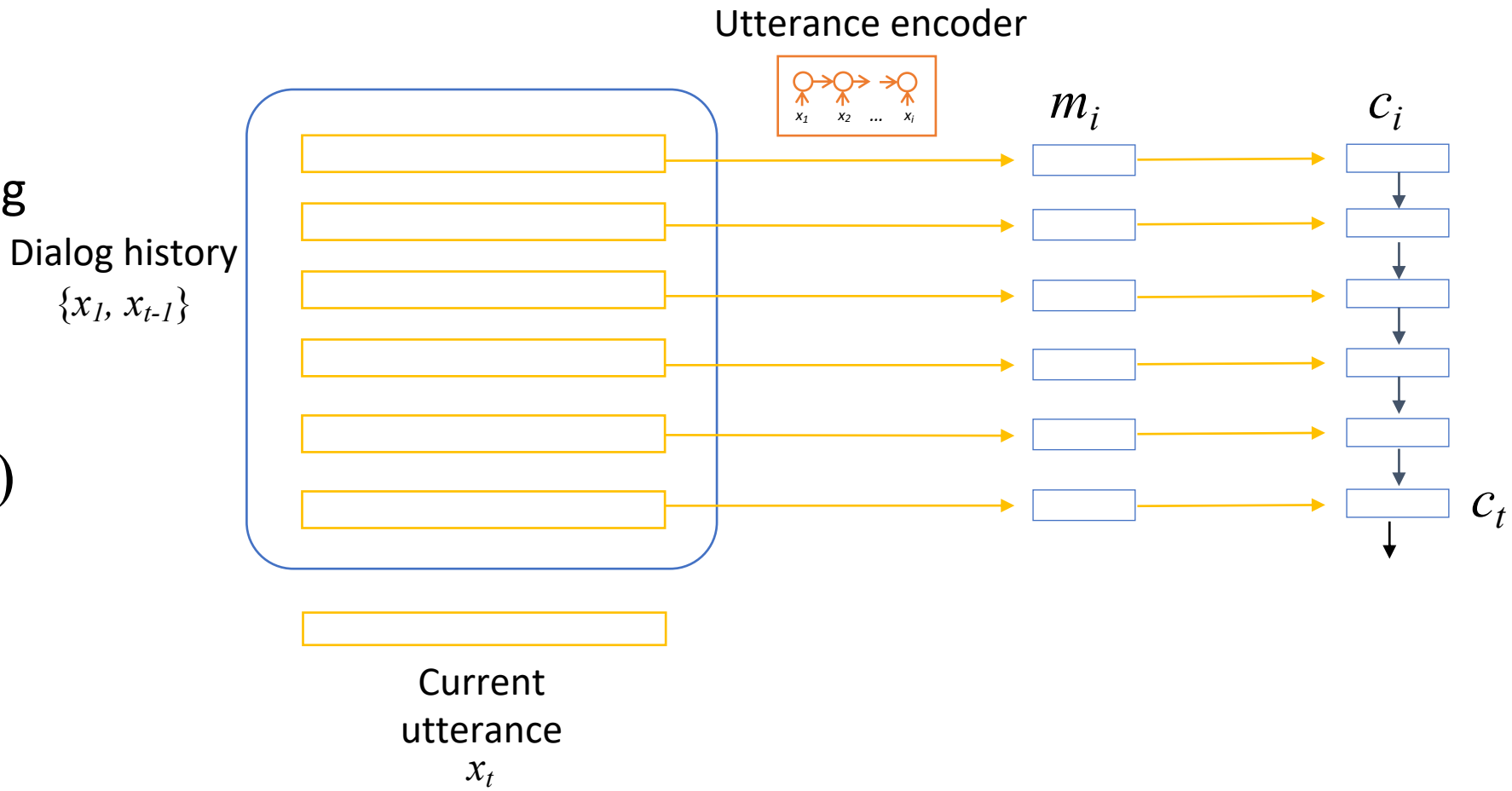

Serban et al, AAAI 2016. Building end-to-end dialogue systems using generative hierarchical neural network models.

Representations of Conversation Context

Hierarchal recurrent neural networks

- The hierarchical RNN encodes the complete conversation context.
- The context vector is the input for decoding.

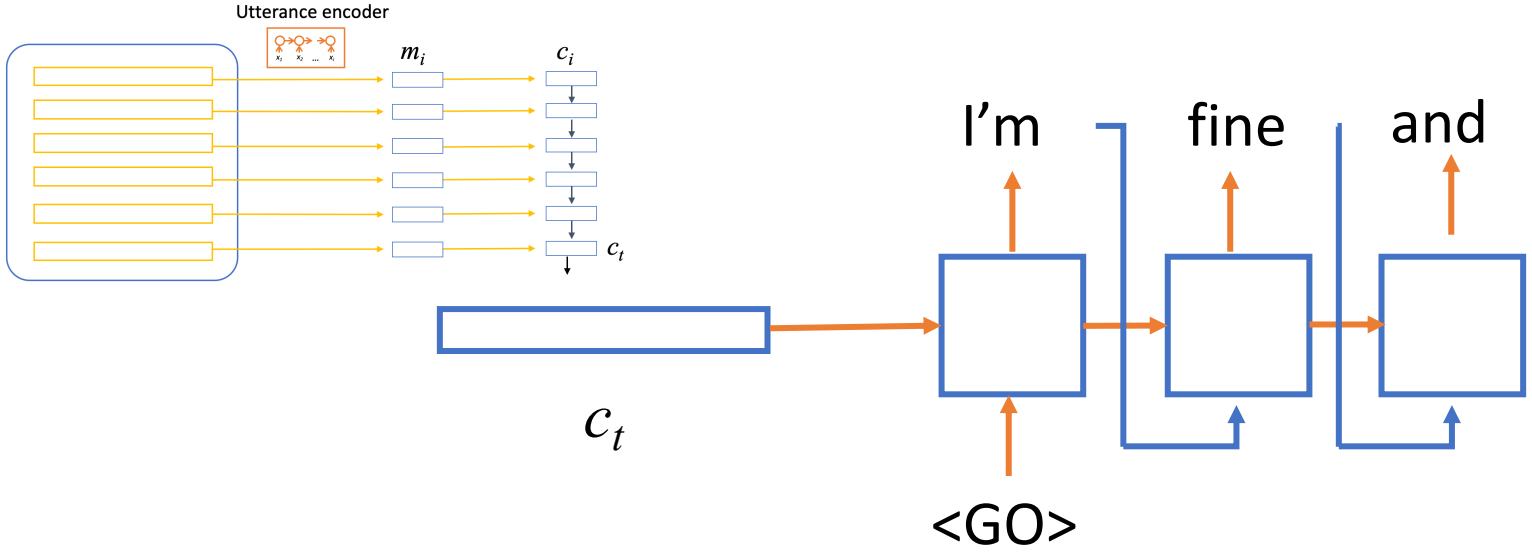

Serban et al, AAAI 2016. Building end-to-end dialogue systems using generative hierarchical neural network models.

Outline for Today

- Sequence-to-Sequence Models
- Beam Search
- Sequence-to-Sequence Models for Response Generation
- Limitations of Sequence-to-Sequence Models
- Attention
- Applications of Attention in NLP

S2S models: Limitations of Encoding

- The final embedding of the input should capture all the information!

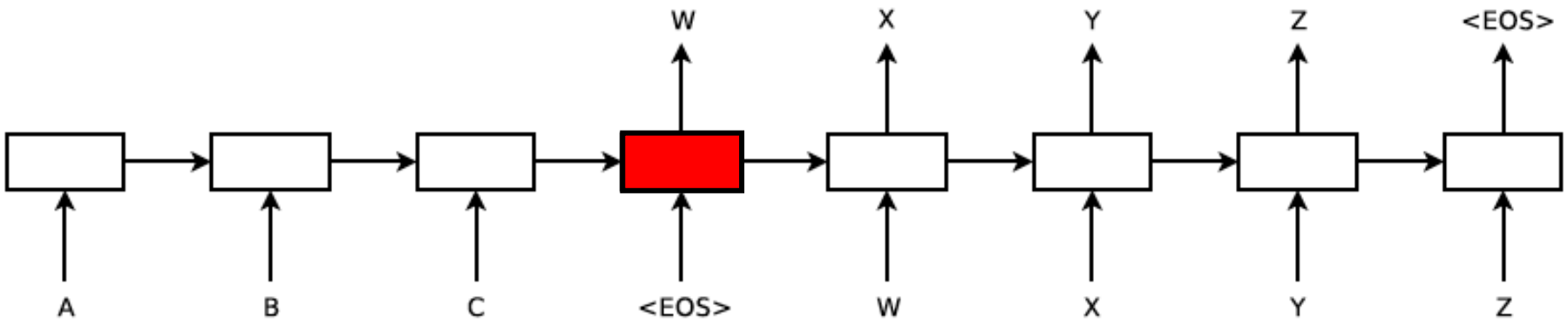

- Encoding of long sequences could be problematic.
  - Even with LSTM/GRU models

Bi-directional Encoder

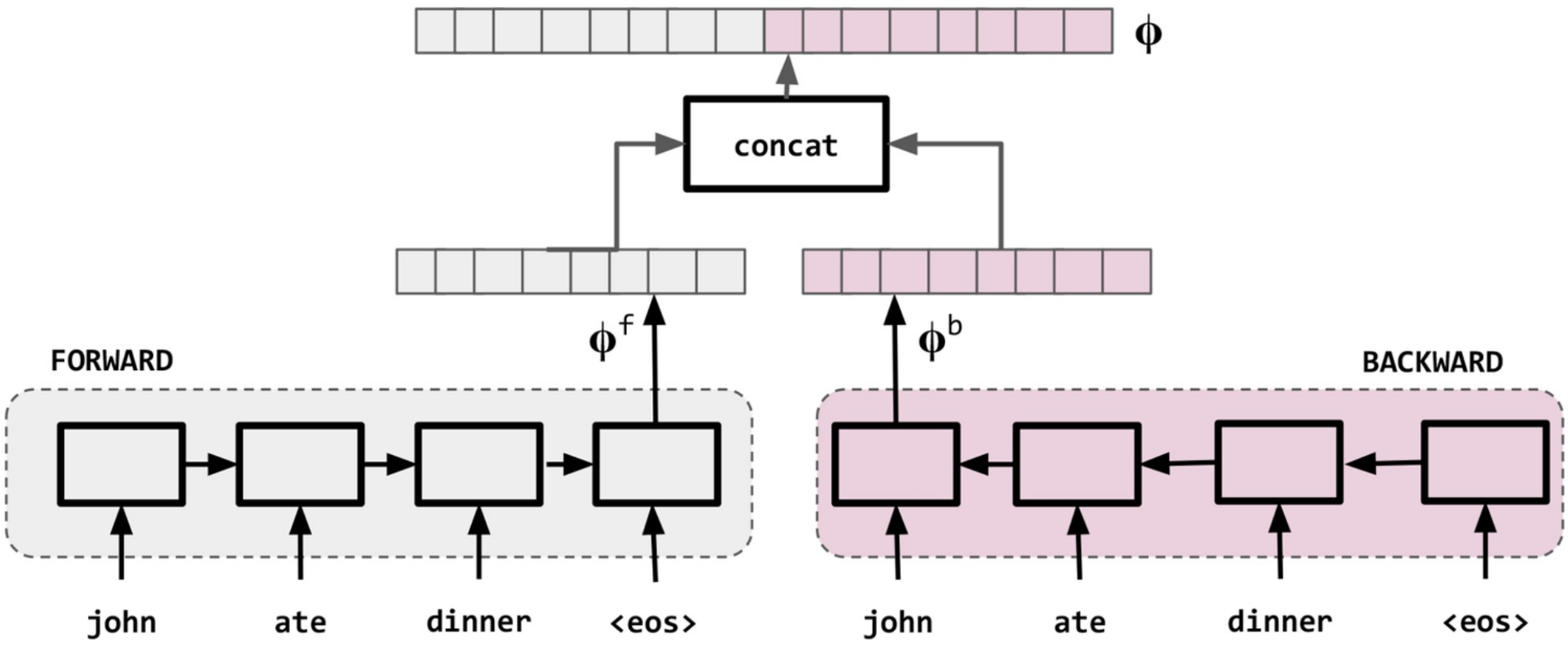

Issue with Sequence-to-Sequence Models

- Maximization based decoding methods, such as beam search, result in generic and bland utterances:

  "Absolutely!" "That is interesting!" "Ok"

- Often times with repetition

  "I I I am fine. I am fine."

- How can we improve the diversity of the responses?

Sampling Methods During Decoding

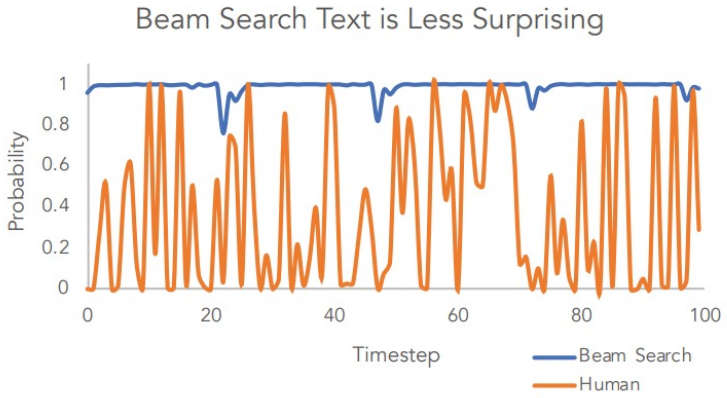

Beam Search

...to provide an overview of the current state-of-the-art in the field of computer vision and machine learning, and to provide an overview of the current state-of-the-art in the field of computer vision and machine learning, and to provide an overview of the current state-of-the-art in the field of computer vision and machine learning, and to provide an overview of the current state-of-the-art in the field of computer vision and machine learning, and...

Human

...which grant increased life span and three years warranty. The Antec HCG series consists of five models with capacities spanning from 400W to 900W. Here we should note that we have already tested the HCG-620 in a previous review and were quite satisfied With its performance. In today's review we will rigorously test the Antec HCG-520, which as its model number implies, has 520W capacity and contrary to Antec's strong beliefs in multi-rail PSUs is equipped...

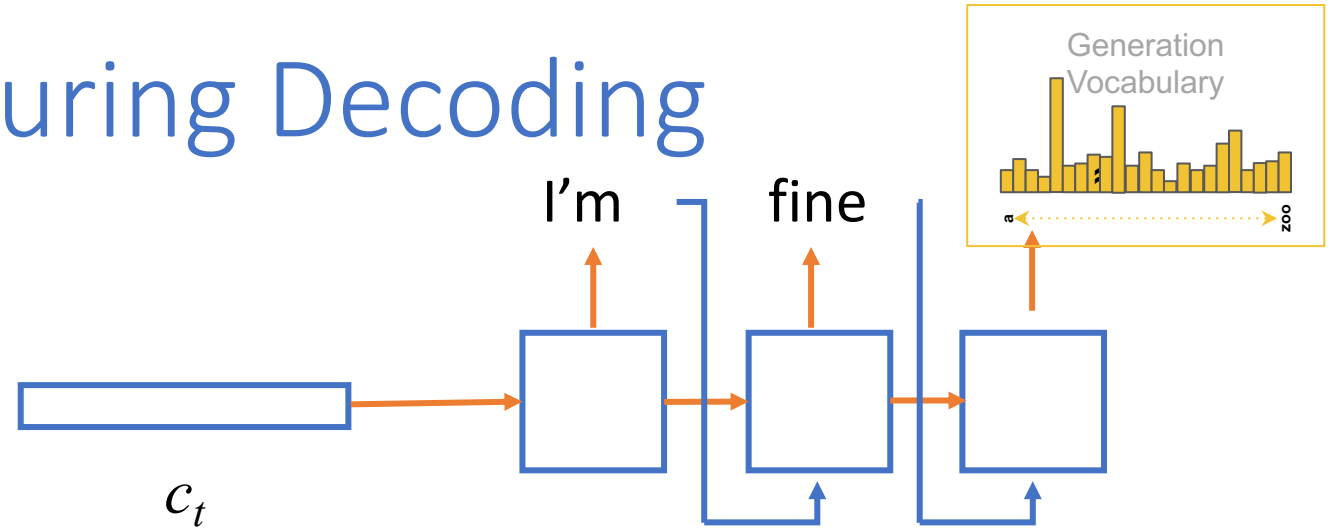

- Given the same context, humans generate words of varying probability (according to model), whereas beam search selects the top words.
- Top-k sampling: At each time step, the top k possible next tokens are sampled from according to their relative probabilities.
- Nucleus Sampling $\sum_{x \in V^{(p)}} P(x|x_{1:i-1}) \geq p.$

Holtzmann et al, ICLR 2020. The curious case of neural text degeneration.

Sampling Methods During Decoding

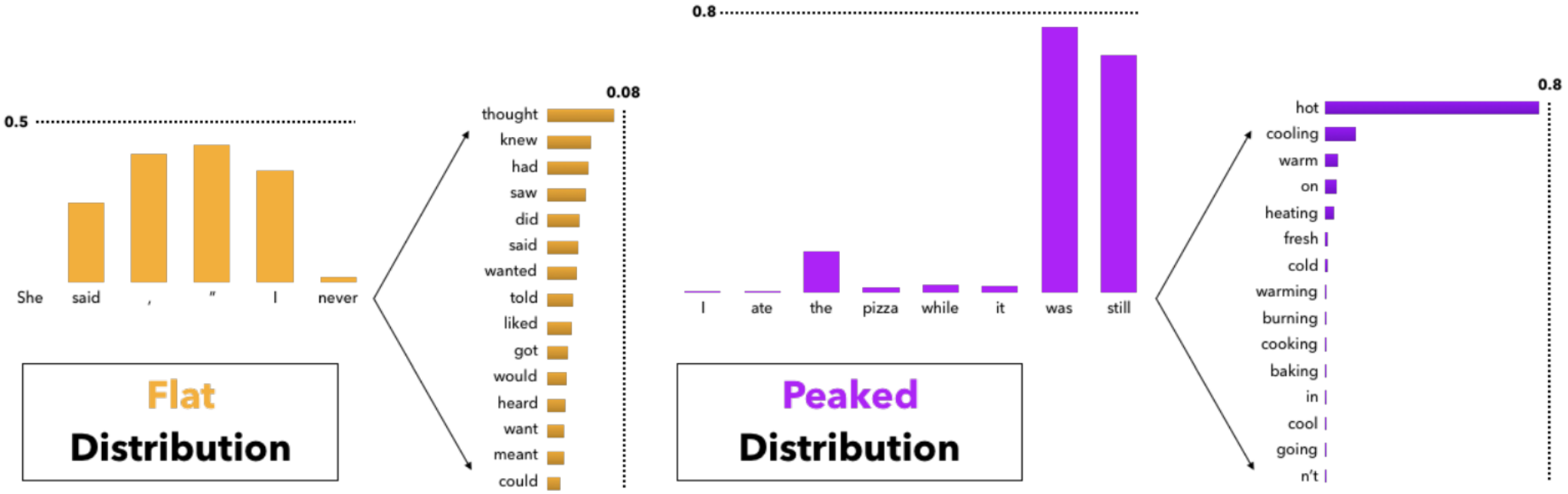

In Nucleus Sampling, the number of candidates considered rises and falls dynamically.
In Top-k Sampling, the number of candidates is fixed to k, which could be sub-optimal across varying contexts. If k is small, generated text will be bland, if k is large, then the list will include inappropriate candidates.

Holtzmann et al, ICLR 2020. The curious case of neural text degeneration.

Sampling Methods During Decoding

- Another common approach, shape the probability distribution through temperature.
- Given the logits, $u_{l:|V|}$ and temperature t, the softmax is re-estimated as:

$$p(x = V_l | x_{1:i-1}) = \frac{\exp(u_l/t)}{\sum_{l'} \exp(u'_l/t)}.$$

Setting temperature in [0,1) skews the probability distribution towards high probability events. Shown to improve quality at the cost of reducing diversity.

Holtzmann et al, ICLR 2020. The curious case of neural text degeneration.

Outline for Today

- Sequence-to-Sequence Models
- Beam Search
- Sequence-to-Sequence Models for Response Generation
- Limitations of Sequence-to-Sequence Models
- Attention
- Applications of Attention in NLP

11/28 - In Class Quiz

https://canvas.ucsc.edu/courses/65869/assignments/522844

https://forms.gle/iX8egLzdnRpqVrxf9

NLP Degree Plan Declaration Form

Thank you for completing the following form to declare which of the NLP Degree Plans you plan to pursue. **Please note that once you choose a degree plan, changes to the plan at a later date are not permitted.**

This form must be submitted by no later than December 8th, 2023. If you have questions about the degree plans before submitting this form, please email nlp@ucsc.edu before the deadline so that the NLP Graduate Student Advisor and the NLP Program Team can help you navigate each option.

Before contacting the NLP Program Team, please draft a plan that aligns with your goals using the following resources:

1. Sample planners for the four- and five-quarter plans are available on the NLP Program Overview page: https://nlp.ucsc.edu/program-overview/

2. You can build planners for either degree plan by clicking on the following links: https://docs.google.com/spreadsheets/d/1cPsGCJbga6ytg3KDQr4wReejRd3iePguhN1Px_C6ahM/copy

While your responses will be treated confidentially, they will be shared with the CSE Advising Team to update your student records and provide enrollment support if needed. If you are an international student, your responses will also be shared with ISSS so that they can provide guidance on any next steps related to immigration policies. Students are responsible for promptly completing any necessary steps advised by CSE Advising, ISSS, and/or the NLP Program Team.

Outline for Today

- Sequence-to-Sequence Models
- Beam Search
- Sequence-to-Sequence Models for Response Generation
- Limitations of Sequence-to-Sequence Models
- Attention
- Applications of Attention in NLP

Attention and Memory: Types of Memory

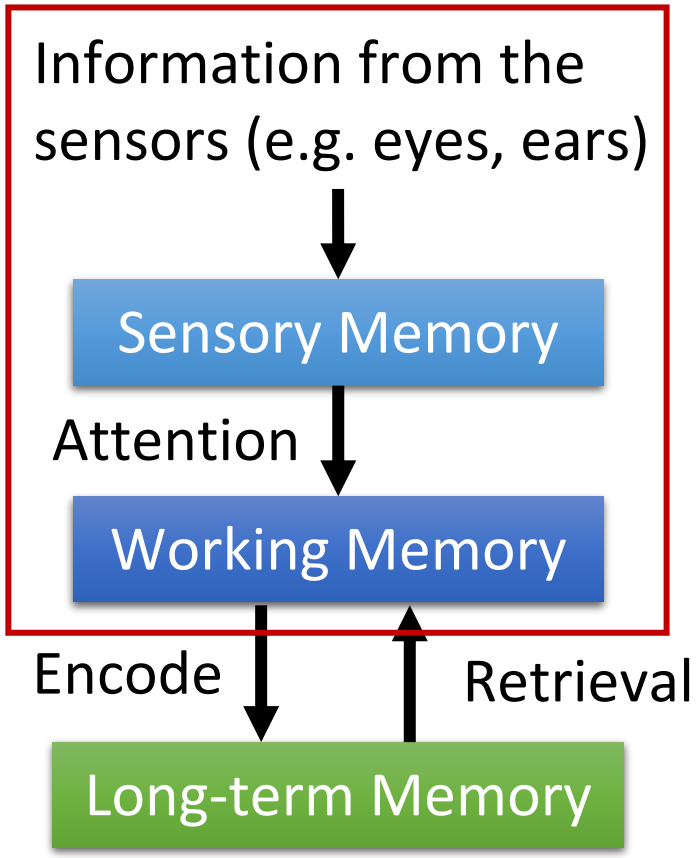

When the input is a very long sequence or an image

→ Pay attention on part of the input object each time

https://en.wikipedia.org/wiki/Memory

Attention and Memory: Types of Memory

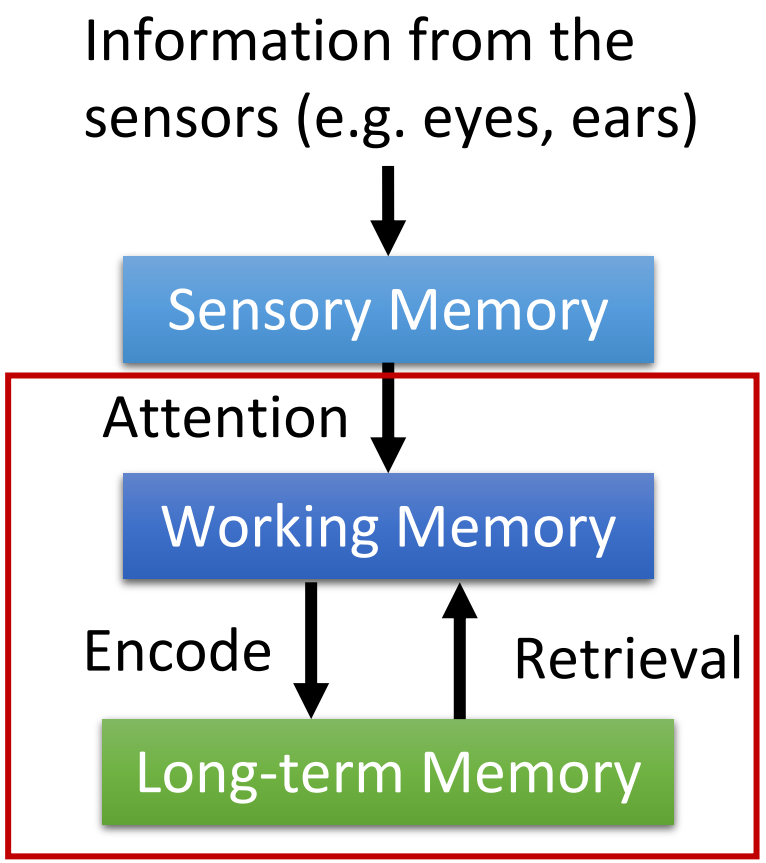

When the input is a very long sequence or an image

→ Pay attention on part of the input object each time

When access to longer term memory is needed

→ We can retrieve contents and use attention mechanisms

https://en.wikipedia.org/wiki/Memory

Machine Translation

- S2S model: both input and output are sequences ***with different lengths***.
- E.g. A B C D → deep learning

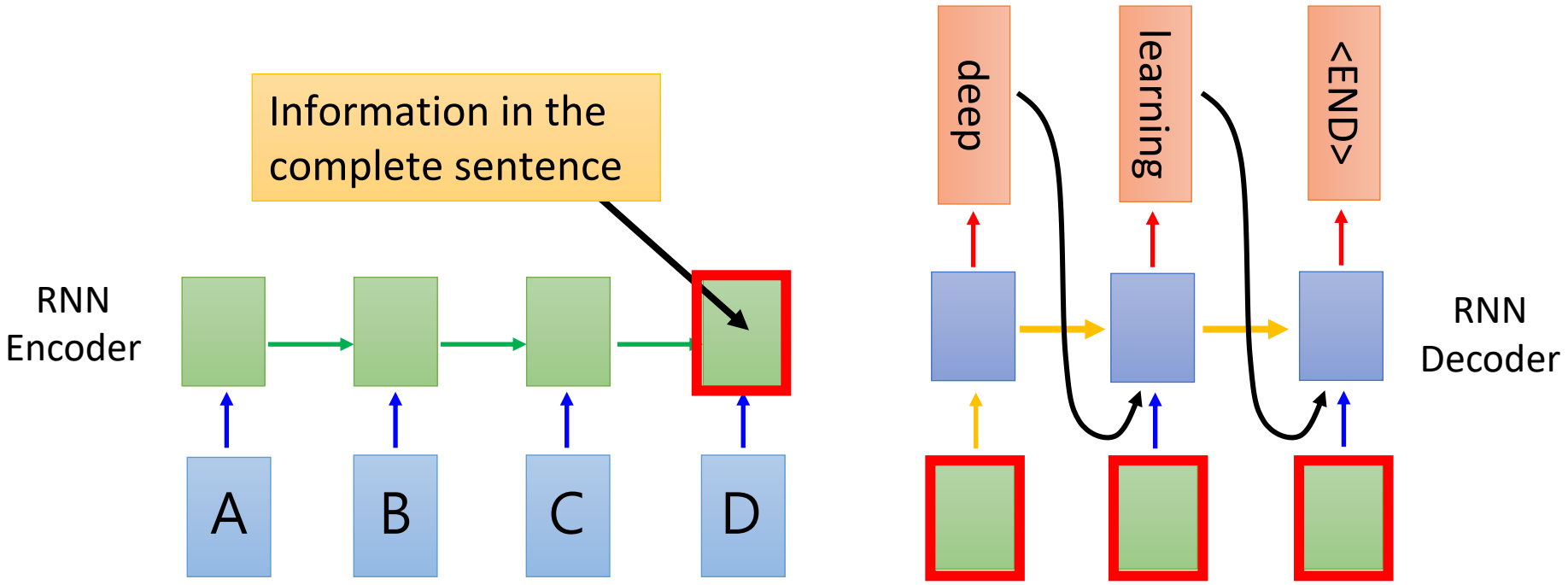

Bahdanu et al., Neural Machine Translation by Jointly Learning to Align and Translate. ICLR, 2015.

Machine Translation with Attention

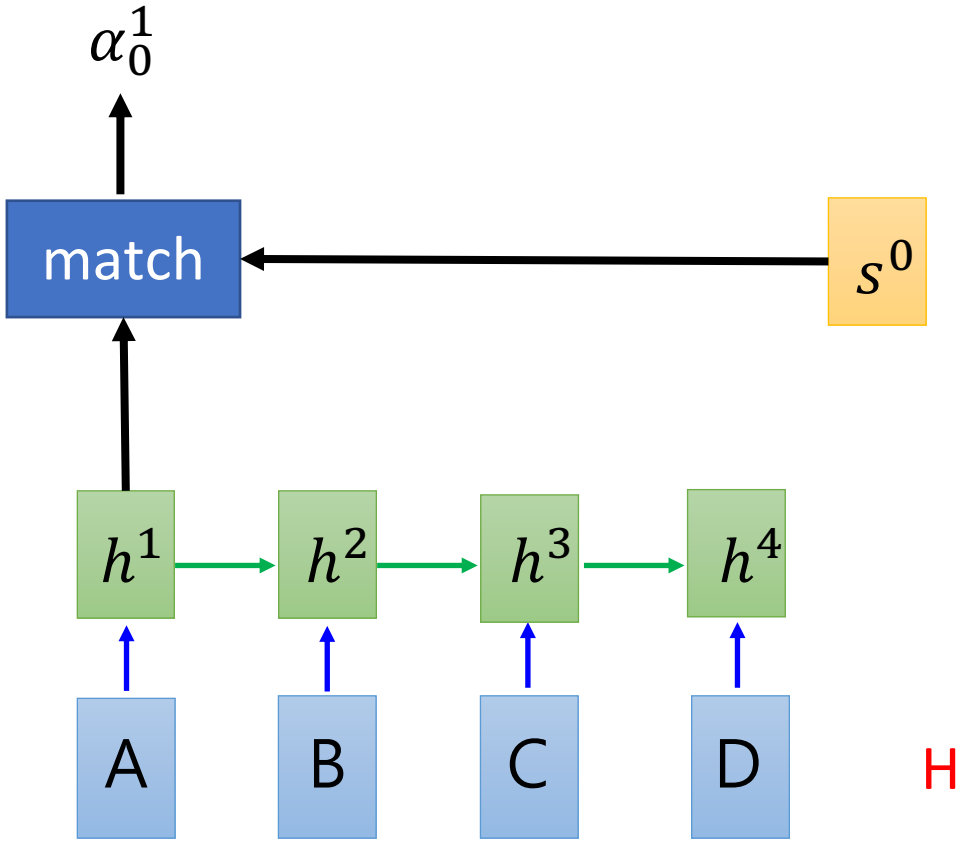

What is **match** ?

- Cosine similarity of s and h
- Small NN whose input is s and h, and output is a scalar
- $\alpha = h^T W s$

How to learn the parameters?

Machine Translation with Attention (cont.)

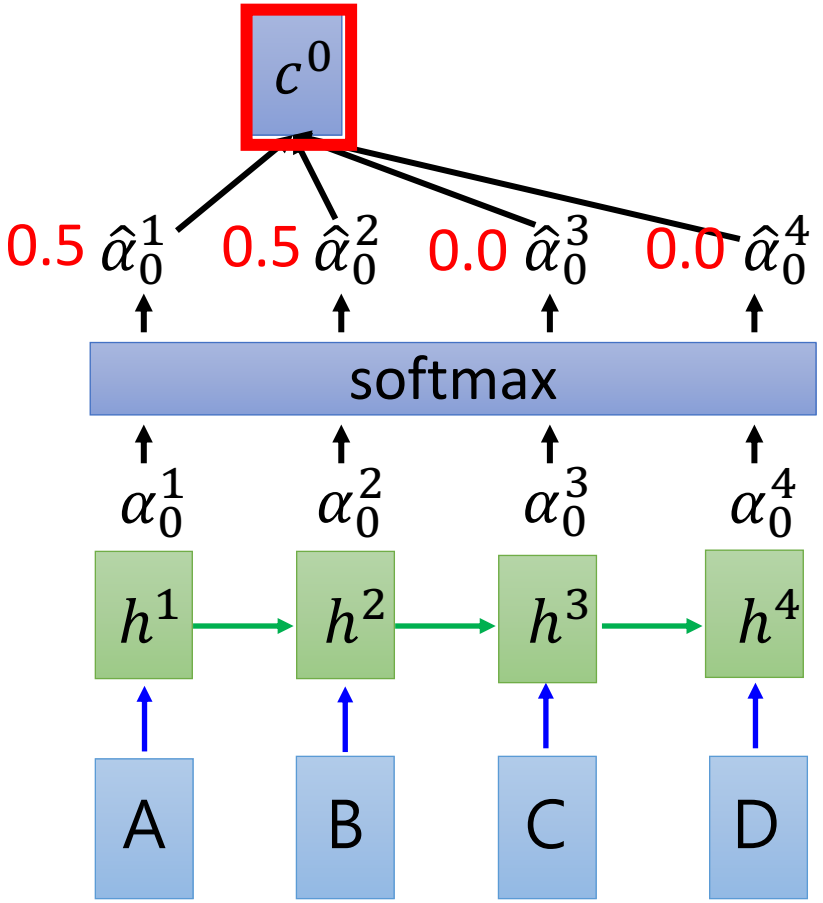

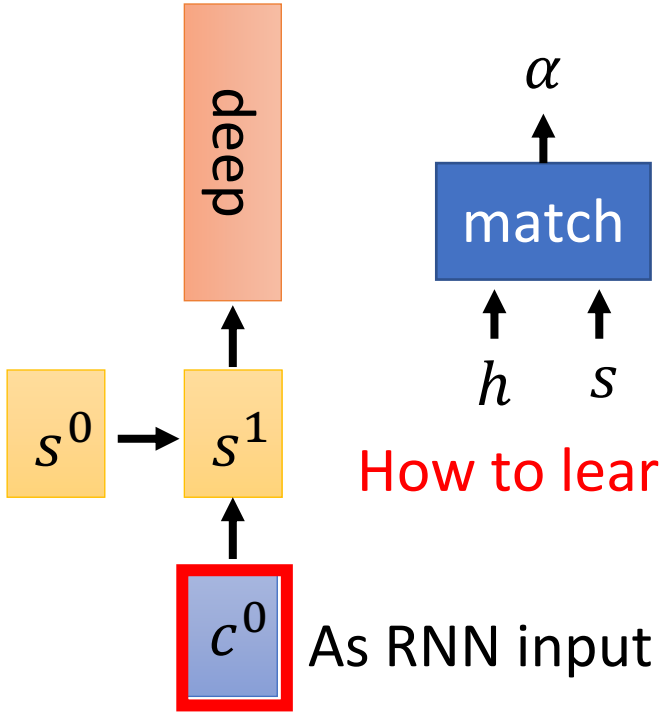

How to learn the parameters?

$$c^0 = \sum \hat{\alpha}_0^i h^i = 0.5h^1 + 0.5h^2$$

Machine Translation with Attention (cont.)

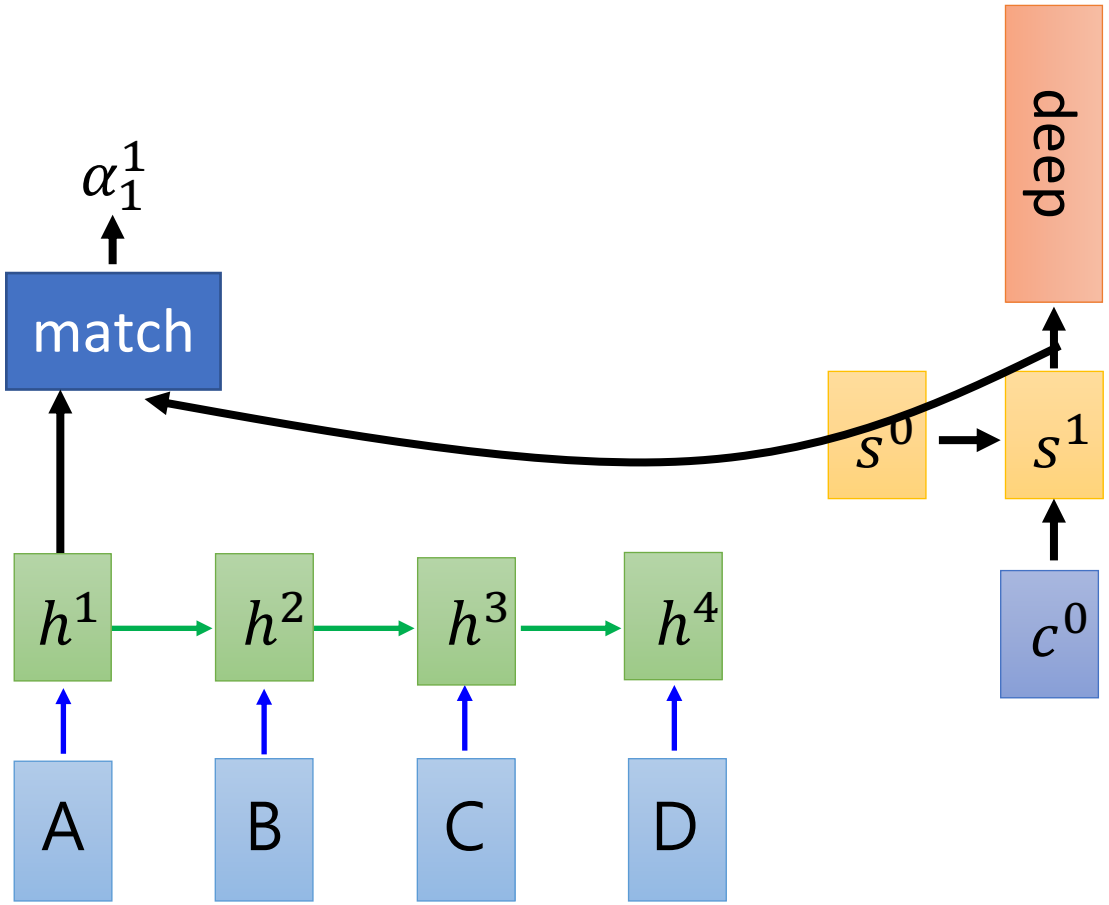

Machine Translation with Attention (cont.)

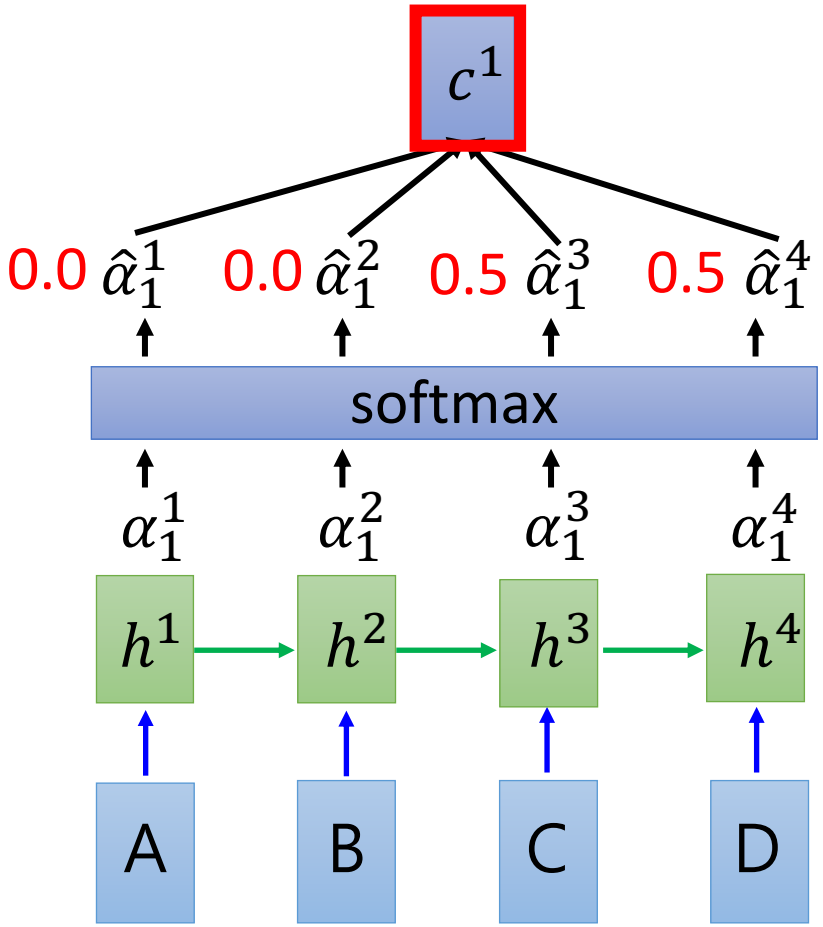

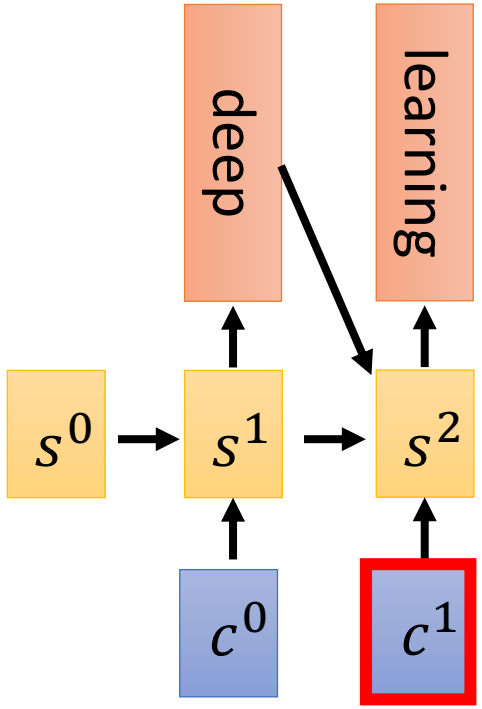

$$c^1 = \sum \hat{\alpha}_1^i h^i = 0.5h^3 + 0.5h^4$$

Machine Translation with Attention (cont.)

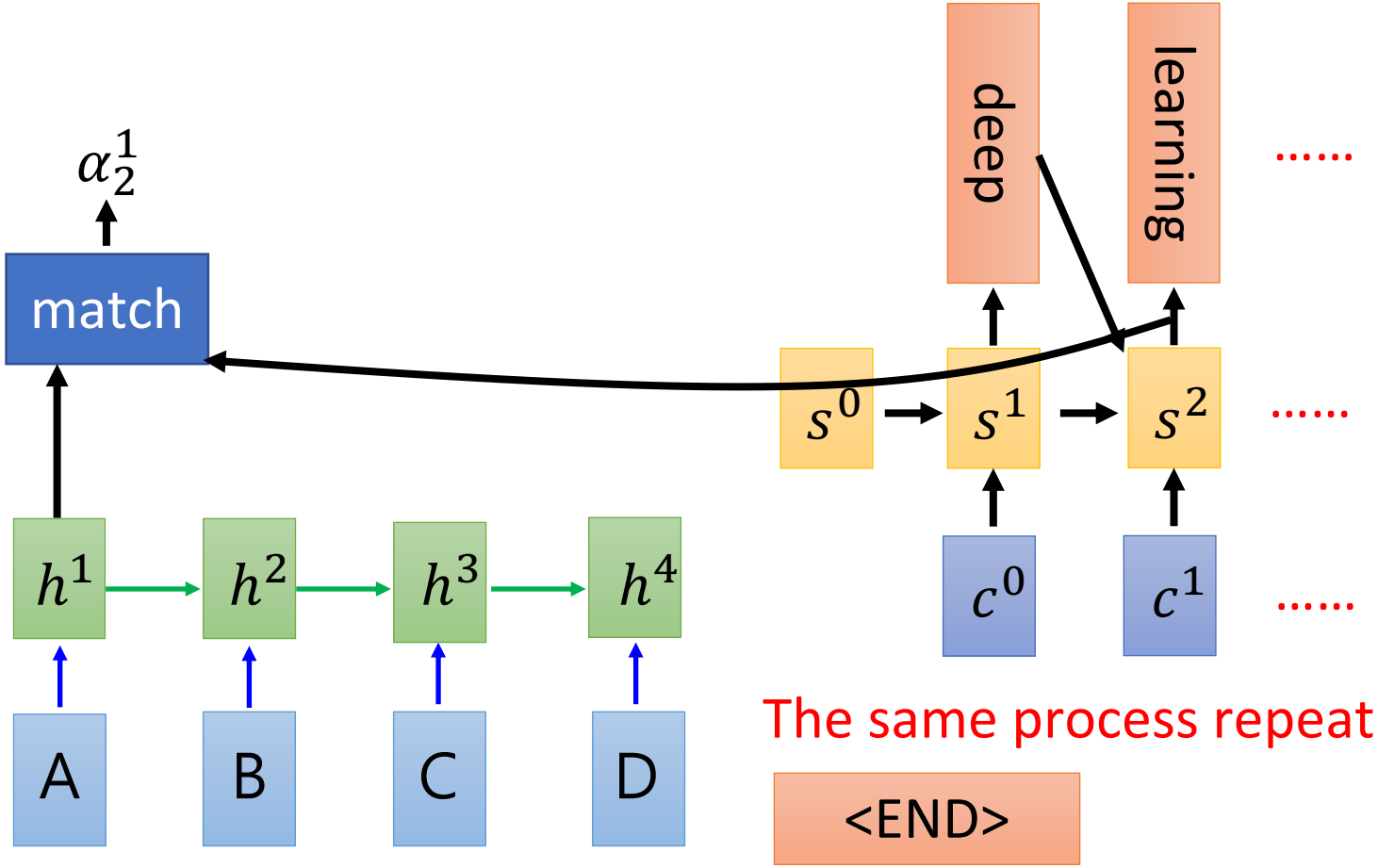

The same process repeat until generating

<END>

S2S Model for Machine Translation

- Input sentence: $\mathbf{x} = (x_1, \cdots, x_{T_x})$
- Encoder RNN:

$$h_t = f(x_t, h_{t-1})$$

$$\phi = q(\{h_1, \cdots, h_{T_x}\})$$

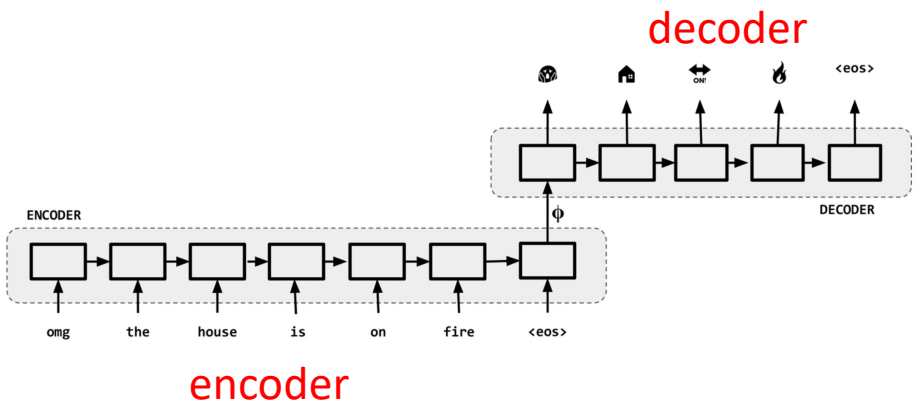

- In S2S models (i.e., Sutskever et al 2014)

$$q(\{h_1, \cdots, h_T\}) = h_T$$

S2S Model for Machine Translation (cont.)

- Target Translation: $\mathbf{y} = (y_1, \cdots, y_{T_y})$
- Decoder RNN:

$$p(\mathbf{y}) = \prod_{t=1}^{T} p(y_t \mid \{y_1, \cdots, y_{t-1}\}, \phi)$$

$$p(y_t \mid \{y_1, \cdots, y_{t-1}\}, \phi) = g(y_{t-1}, s_t, \phi)$$

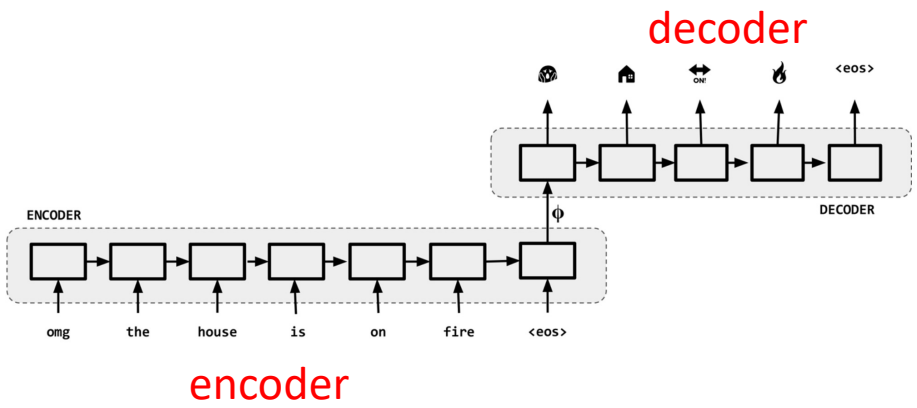

Machine Translation with Attention (cont.)

- Encoder is similar.
- Decoder RNN:

$$p(y_i|y_1,\ldots,y_{i-1},\mathbf{x}) = g(y_{i-1}, s_i, c_i)$$

$$s_i = f(s_{i-1}, y_{i-1}, c_i)$$

- The context vector c_i depends on h_j

$$c_i = \sum_{j=1}^{T_x} \alpha_{ij} h_j$$

$$\alpha_{ij} = \frac{\exp(e_{ij})}{\sum_{k=1}^{T_x} \exp(e_{ik})} \qquad e_{ij} = a(s_{i-1}, h_j)$$

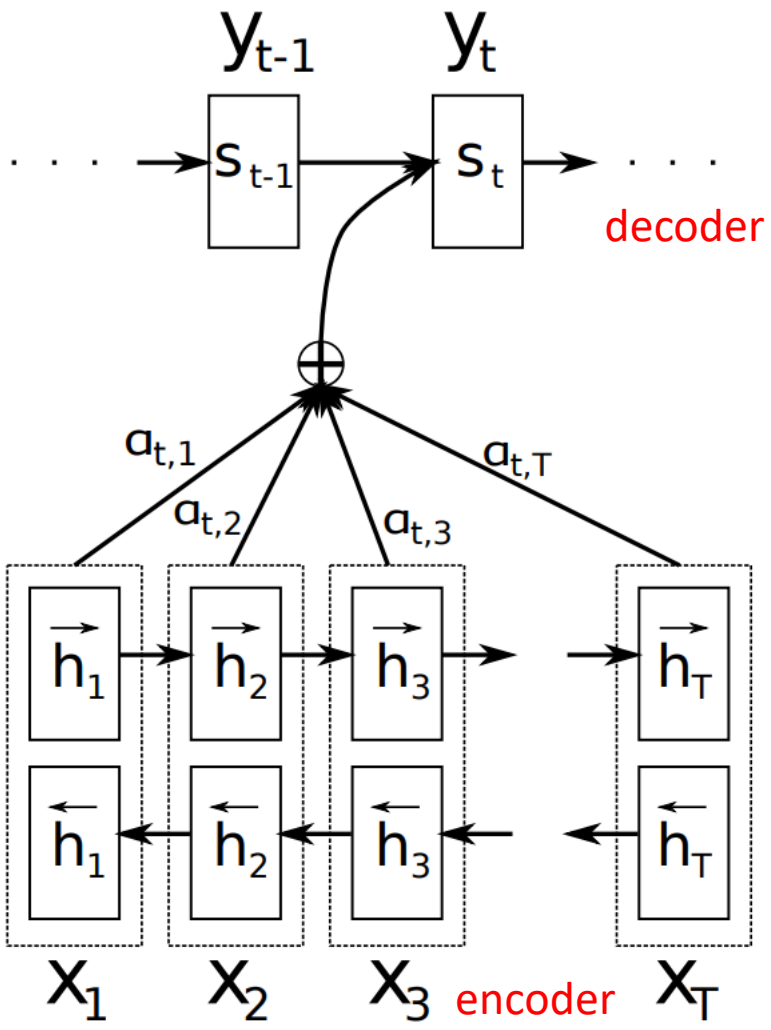

Visualization of Attention for MT

- Attention probability matrix can be useful for visualization.
- Pixels show the weight α_{ij} of the annotation of the jth source word for the ith target word
- Plot is grayscale (0: black, 1: white)

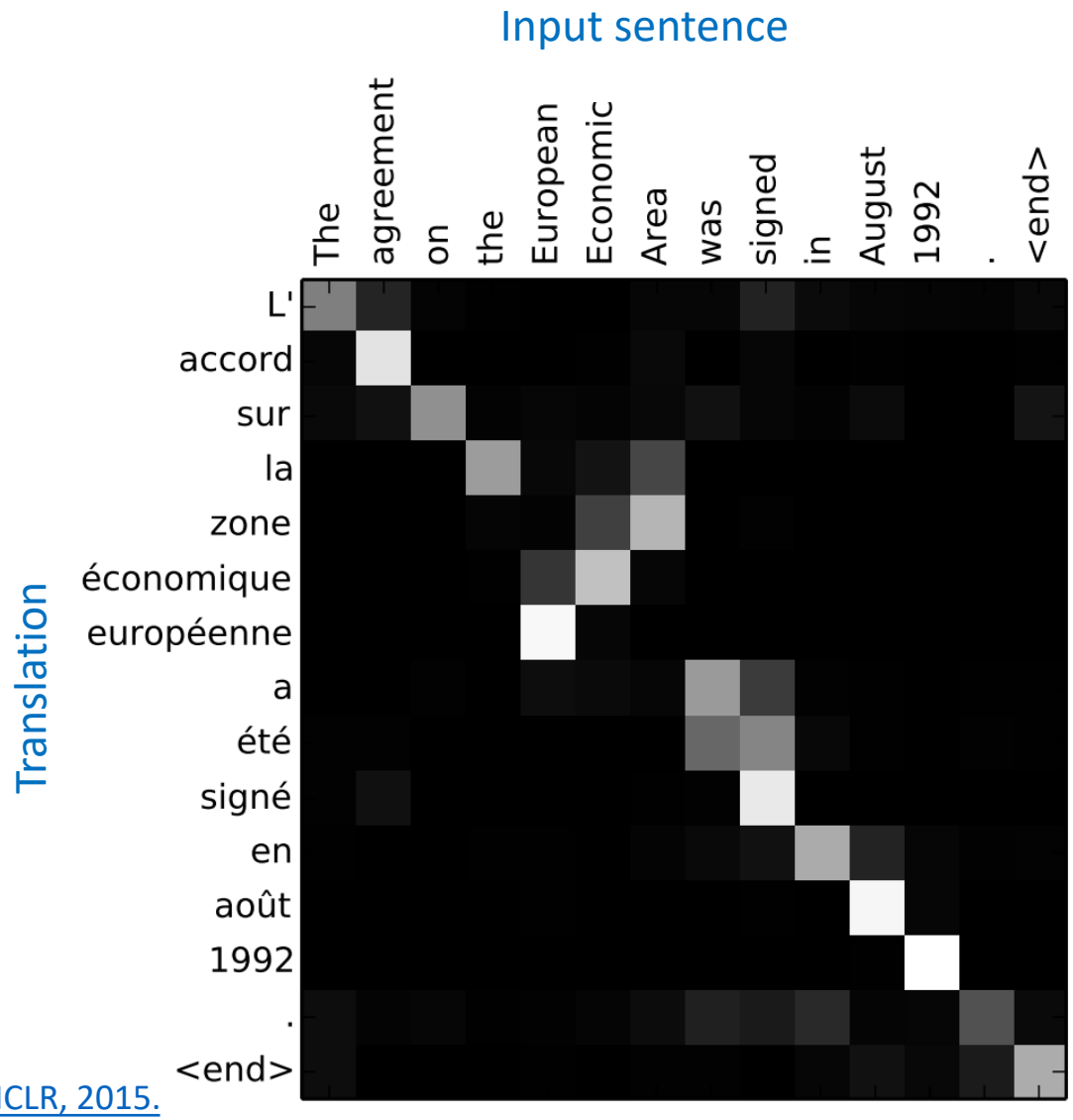

Bahdanu et al., Neural Machine Translation by Jointly Learning to Align and Translate. ICLR, 2015.

Image Captioning

- Input: image
- Output: word sequence

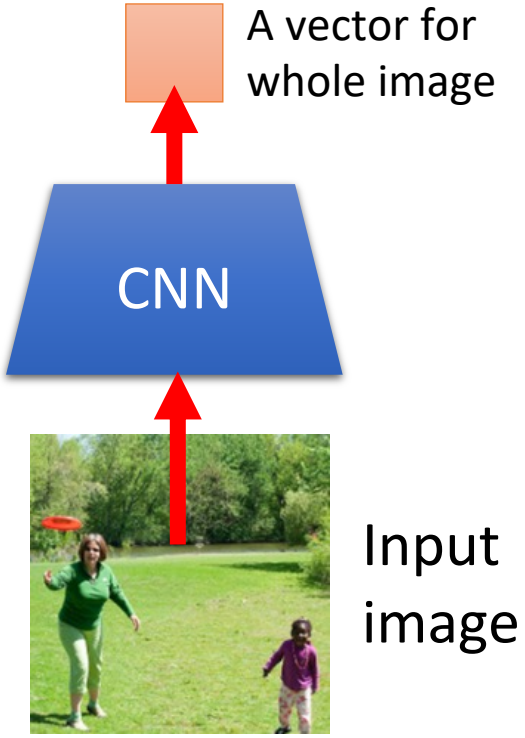

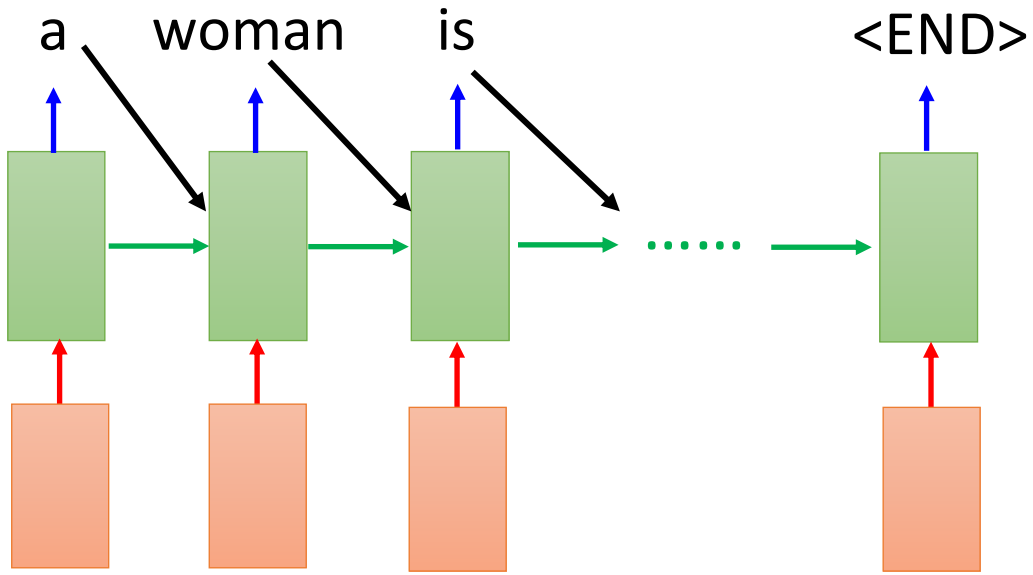

Image Captioning with Attention

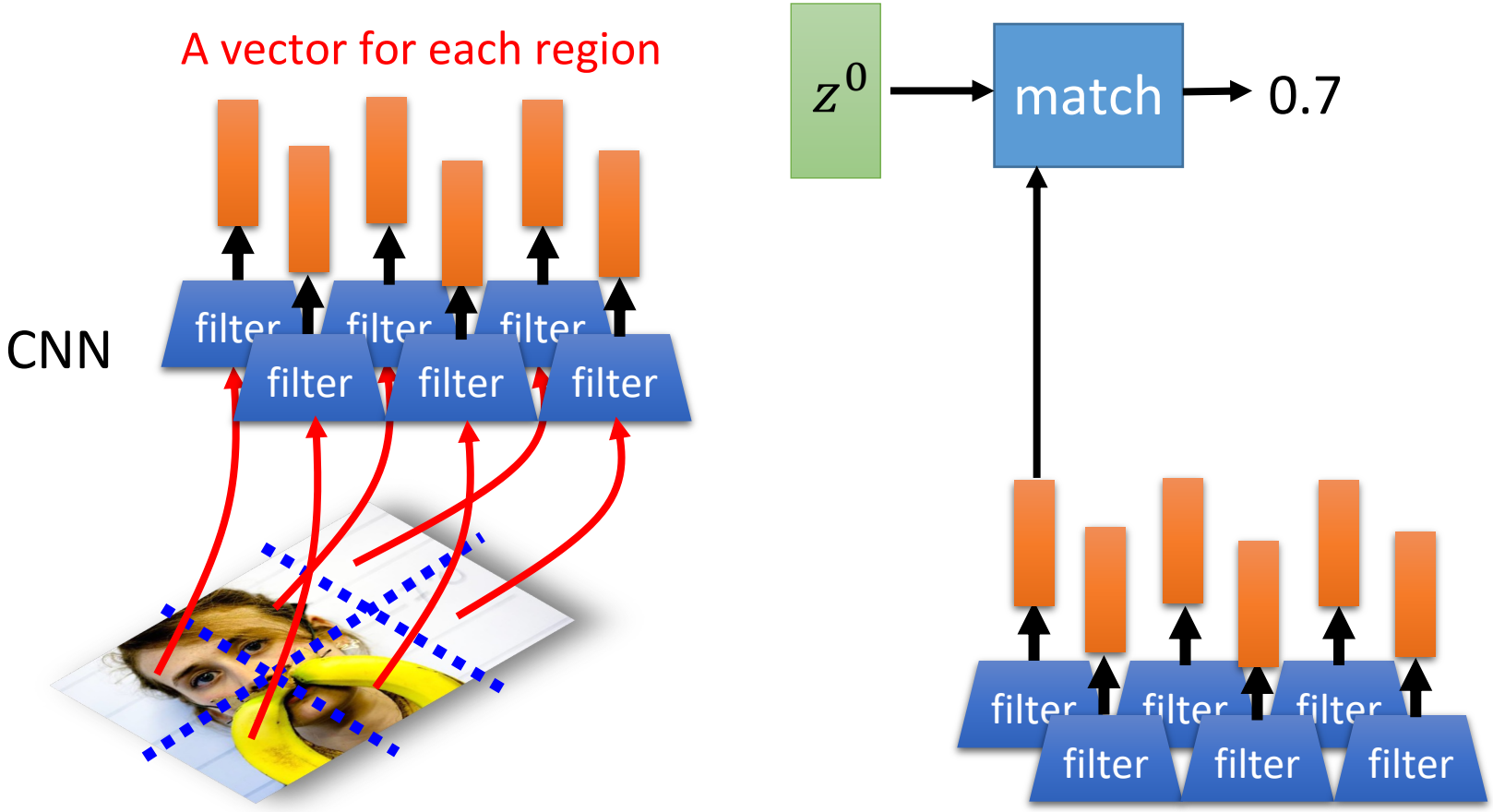

Xu et al, Show, Attend and Tell: Neural Image Caption Generation with Visual Attention

Image Captioning with Attention

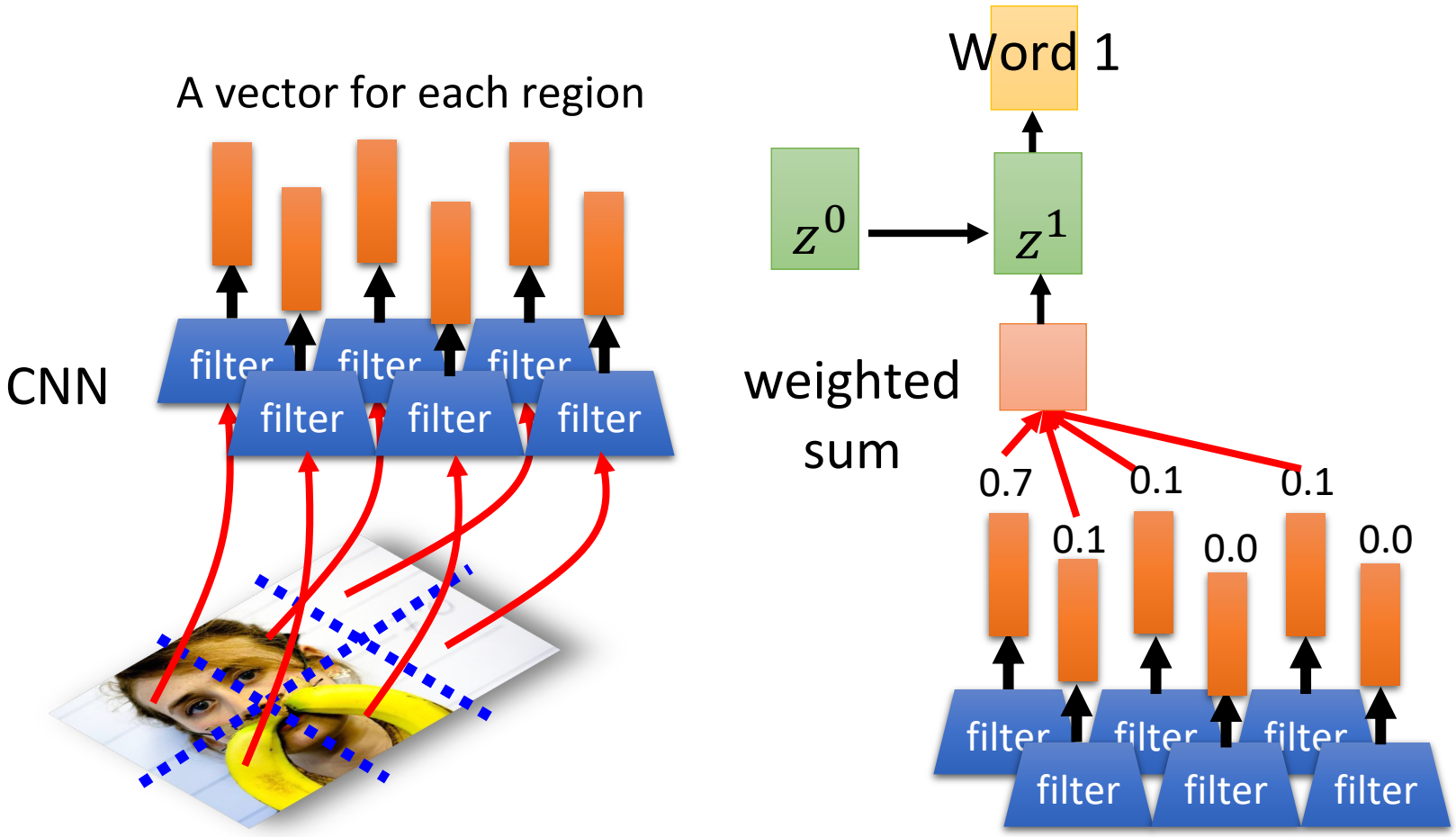

Image Captioning with Attention

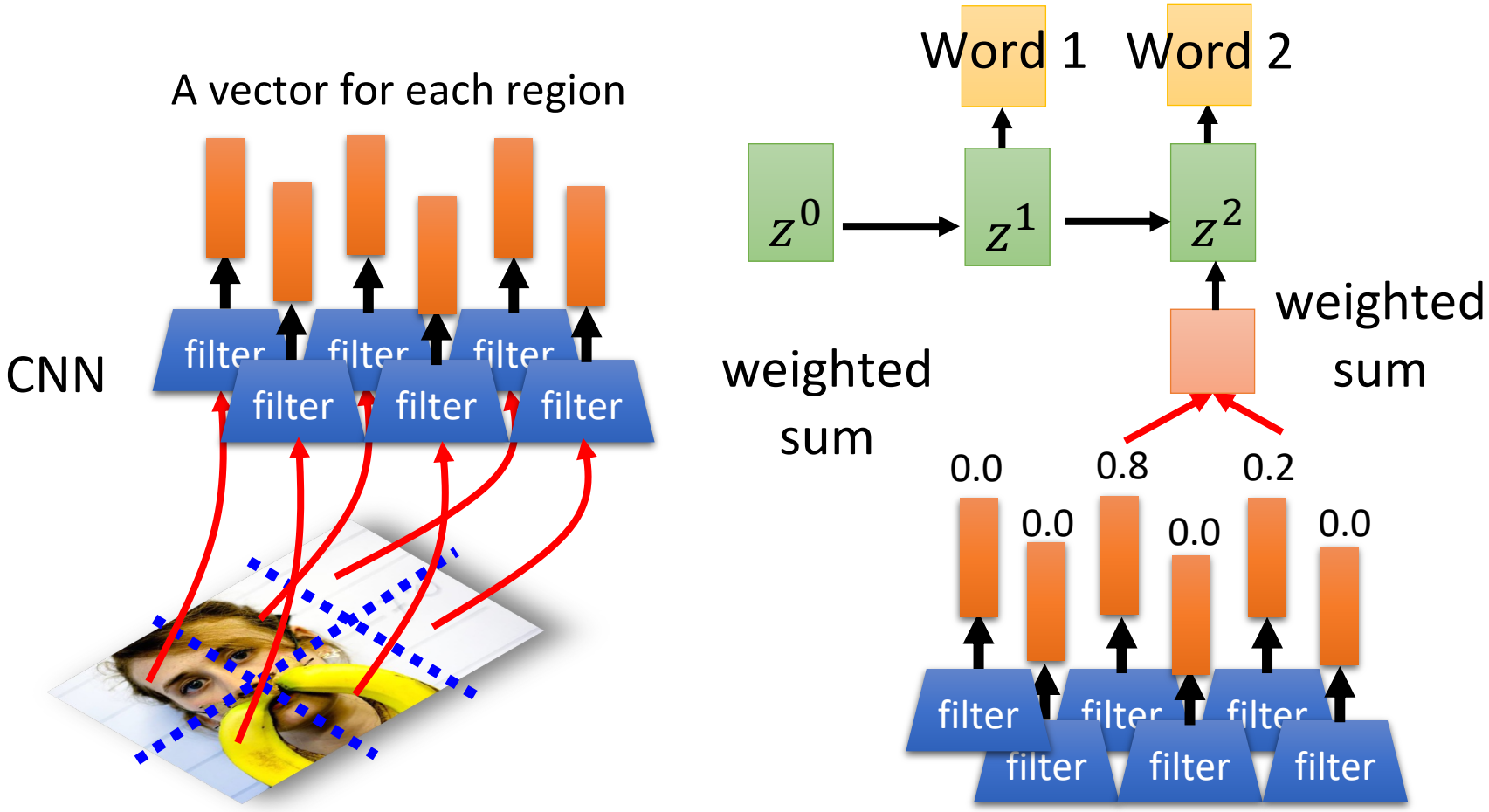

Image Captioning

- Good examples

A woman is throwing a frisbee in a park.

A dog is standing on a hardwood floor.

A stop sign is on a road with a mountain in the background.

A little girl sitting on a bed with a teddy bear.

A group of people sitting on a boat in the water.

A giraffe standing in a forest with trees in the background.

Image Captioning

- Bad examples

A large white bird standing in a forest.

A woman holding a clock in her hand.

A man wearing a hat and
a hat on a skateboard.

A person is standing on a beach
with a surfboard.

A woman is sitting at a table
with a large pizza.

A man is talking on his cell phone
while another man watches.

11/28 - In Class Quiz

https://canvas.ucsc.edu/courses/65869/assignments/522844

https://forms.gle/iX8egLzdnRpqVrxf9

NLP Degree Plan Declaration Form

Thank you for completing the following form to declare which of the NLP Degree Plans you plan to pursue. **Please note that once you choose a degree plan, changes to the plan at a later date are not permitted.**

This form must be submitted by no later than December 8th, 2023. If you have questions about the degree plans before submitting this form, please email nlp@ucsc.edu before the deadline so that the NLP Graduate Student Advisor and the NLP Program Team can help you navigate each option.

Before contacting the NLP Program Team, please draft a plan that aligns with your goals using the following resources:

1. Sample planners for the four- and five-quarter plans are available on the NLP Program Overview page: https://nlp.ucsc.edu/program-overview/

2. You can build planners for either degree plan by clicking on the following links: https://docs.google.com/spreadsheets/d/1cPsGCJbga6ytg3KDQr4wReejRd3iePguhN1Px_C6ahM/copy

While your responses will be treated confidentially, they will be shared with the CSE Advising Team to update your student records and provide enrollment support if needed. If you are an international student, your responses will also be shared with ISSS so that they can provide guidance on any next steps related to immigration policies. Students are responsible for promptly completing any necessary steps advised by CSE Advising, ISSS, and/or the NLP Program Team.

Outline for Today

- Sequence-to-Sequence Models
- Beam Search
- Sequence-to-Sequence Models for Response Generation
- Limitations of Sequence-to-Sequence Models
- Attention
- Applications of Attention in NLP

Outline for Today

- Sequence-to-Sequence Models
- Beam Search
- Limitations of Sequence-to-Sequence Models
- Attention
- Applications of Attention for NLP

Slide from earlier lecture

Natural Language Understanding

- Tag a word at each timestamp
  - Input: word sequence
  - Output: IOB-format slot tag and intent tag

<START>	send	an	email	to	bob	about	fishing	this	weekend	<END>
O	O	O	O	O	B-contact_name	O	B-subject	I-subject	I-subject	send_email

→ send_email(contact_name="bob", subject="fishing this weekend")

Temporal orders for input and output are the same

Recurrent Neural Nets for Slot Tagging – I

- Variations:
  a. RNNs with LSTM cells
  b. Input, sliding window of n-grams
  c. Bi-directional LSTMs

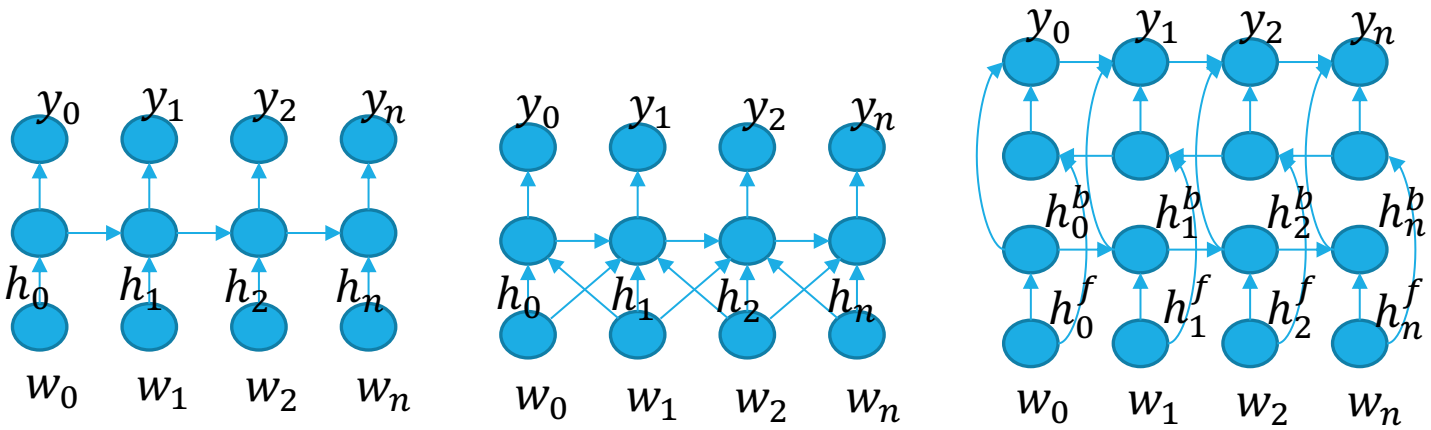

(a) LSTM (b) LSTM-LA (c) bLSTM

Recurrent Neural Nets for Slot Tagging – II

- Encoder-decoder networks
  - Leverages sentence level information

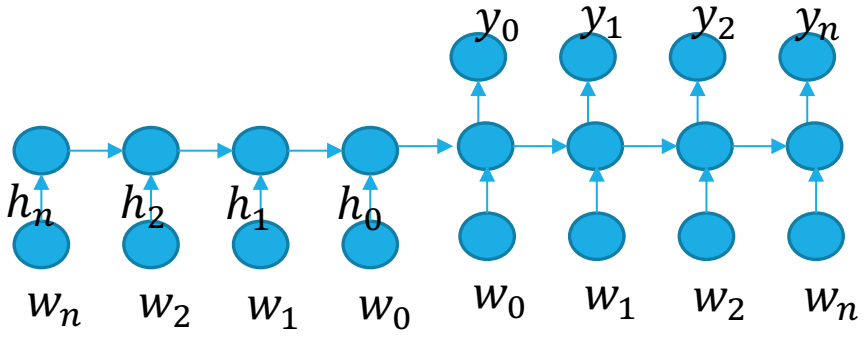

- Attention-based encoder-decoder
  - Use of attention (as in MT) in the encoder-decoder network
  - Attention is estimated using a feed-forward network with input: h_t and s_t at time t

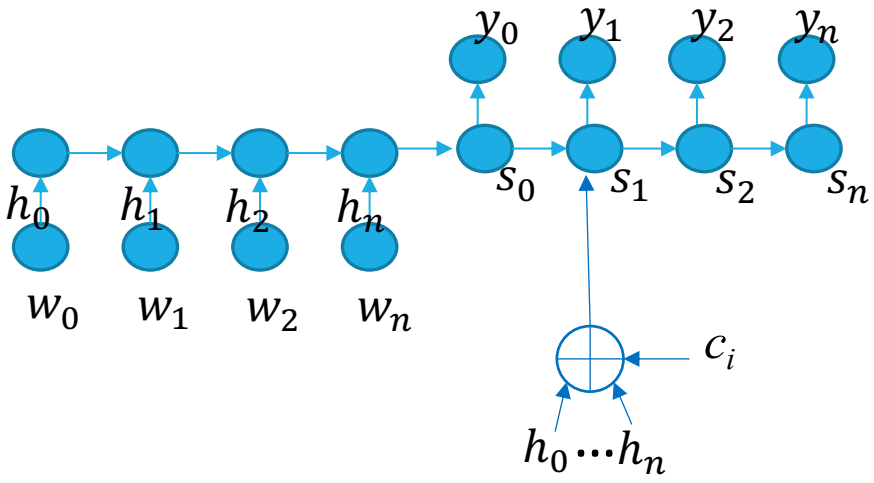

Memory networks: other applications

- Natural language understanding in conversational systems mainly consider the last user utterance.

<START>	send	an	email	to	bob	about	fishing	this	weekend	<END>
O	O	O	O	O	B-contact_name	O	B-subject	I-subject	I-subject	send_email

→ send_email(contact_name="bob", subject="fishing this weekend")

Challenge: Integrating Conversation Context

User utterances are highly ambiguous in isolation

Restaurant booking

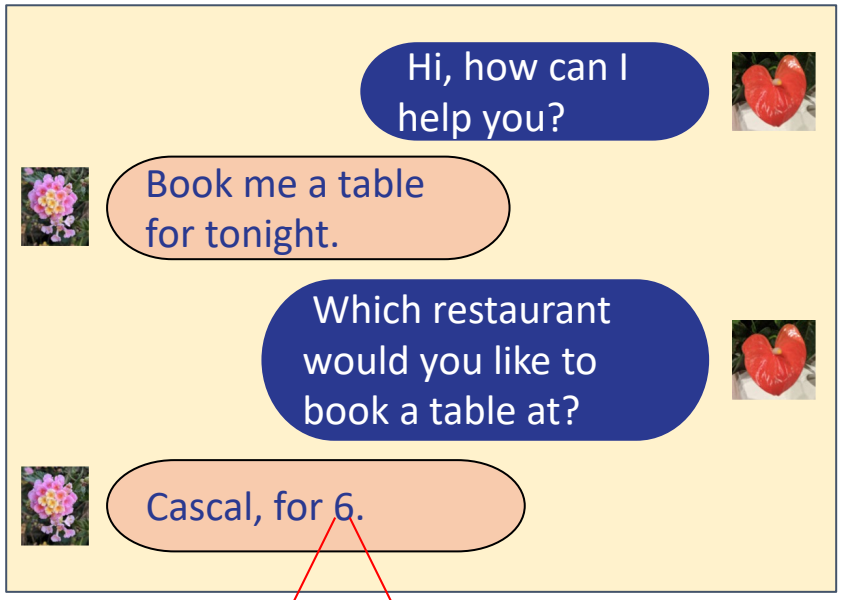

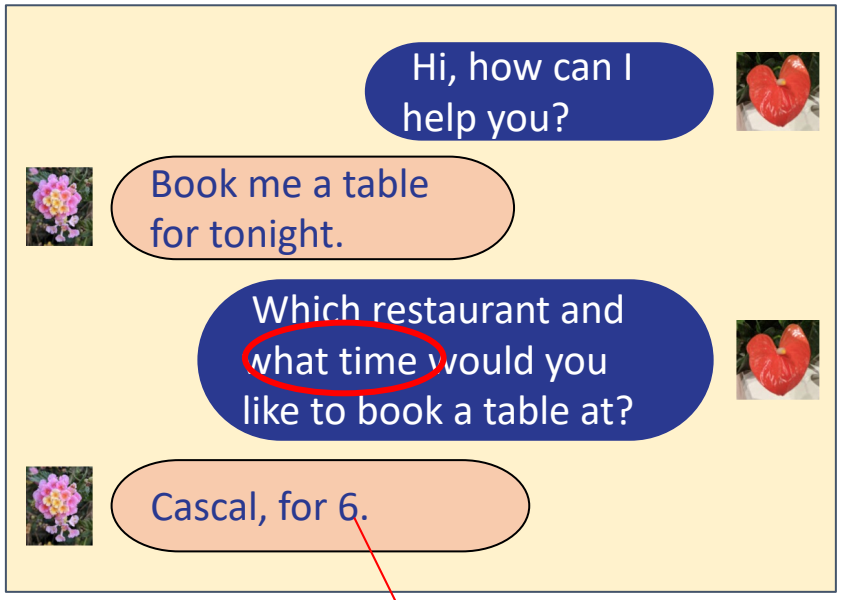

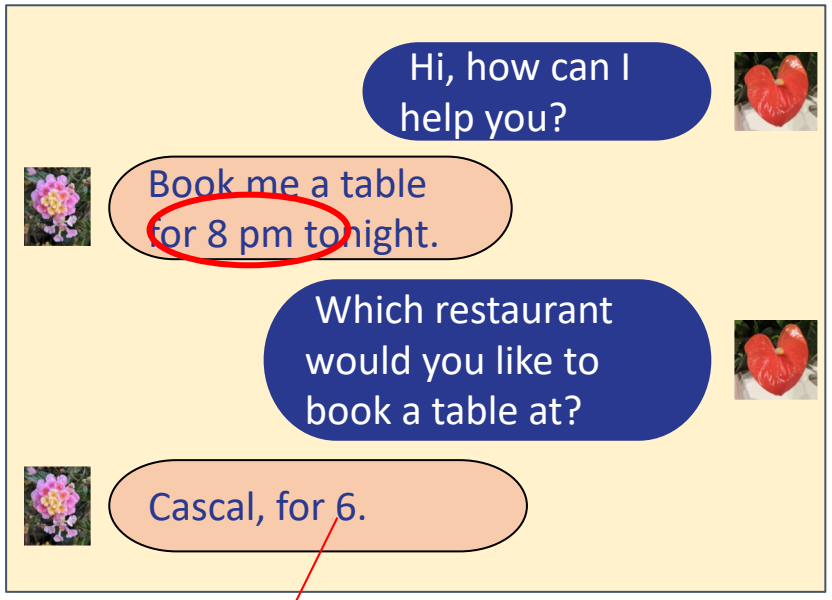

?

No. people

Reservation time

Reservation time

No. people

Previous Work on Contextual NLU

Seq2Seq model (Hori et al, 2015)

Words are input one at a time, tags are output at the end of each utterance

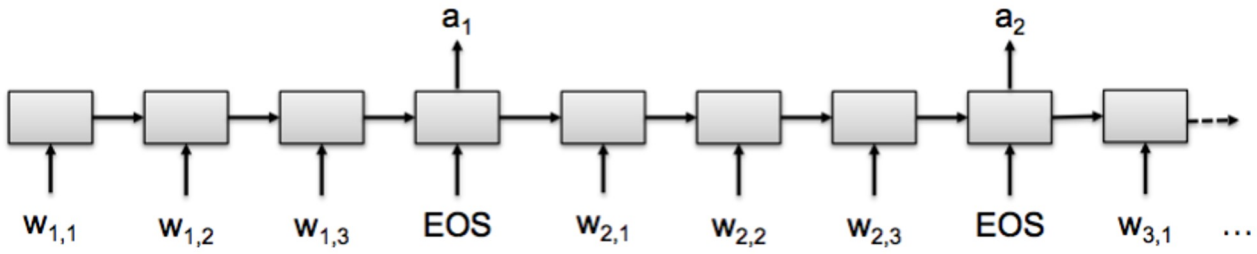

Extension: LSTM with speaker role dependent layers

Use of Conversation Context for NLU

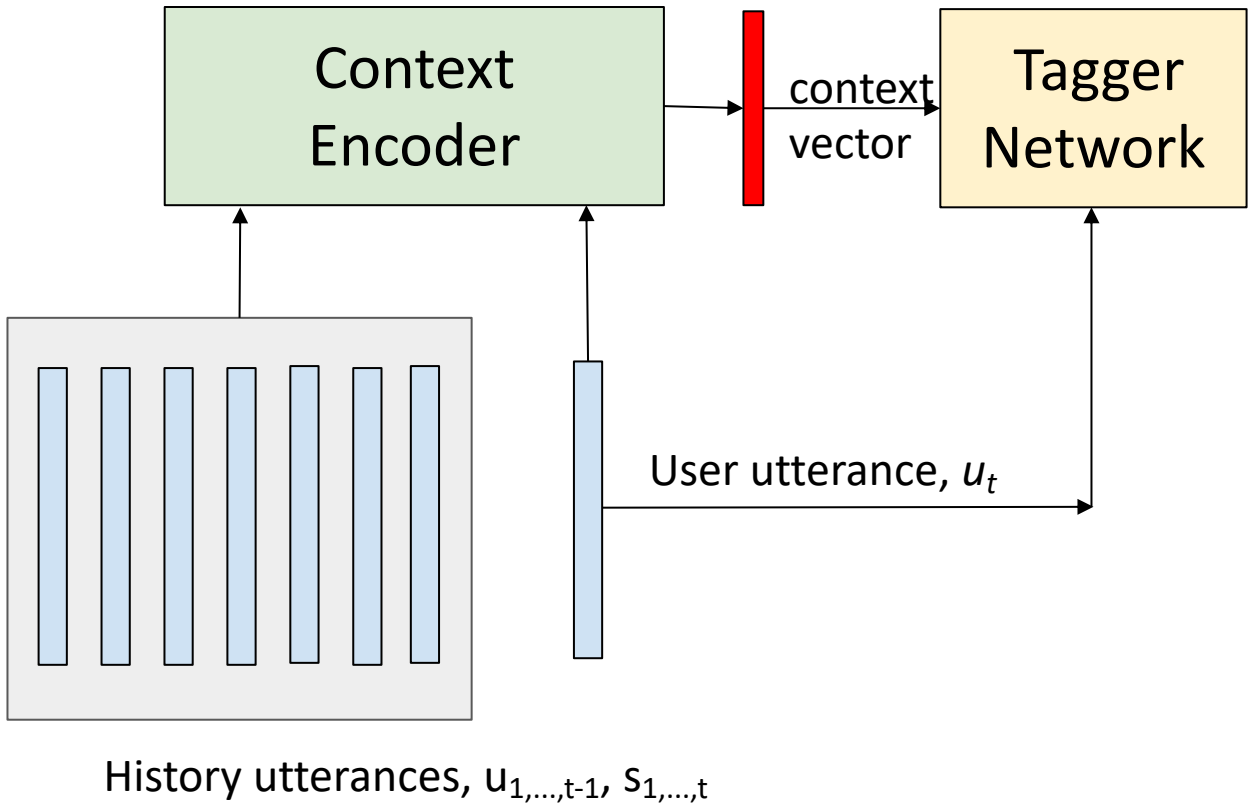

- Encoding current and previous conversation turns
- Combining history embeddings
- Using them during NLU for the current conversation turn

Use of Conversation Context for NLU (cont.)

U: "i d like to purchase tickets to see deepwater horizon"

S: "for which theatre"

U: "angelika"

S: "you want them for angelika theatre?"

U: "yes angelika"

S: "how many tickets would you like ?"

U: "3 tickets for saturday"

S: "What time would you like ?"

U: "Any time on saturday is fine"

S: "okay , there is 4:10 pm , 5:40 pm and 9:20 pm"

U: "Let's do 5:40"

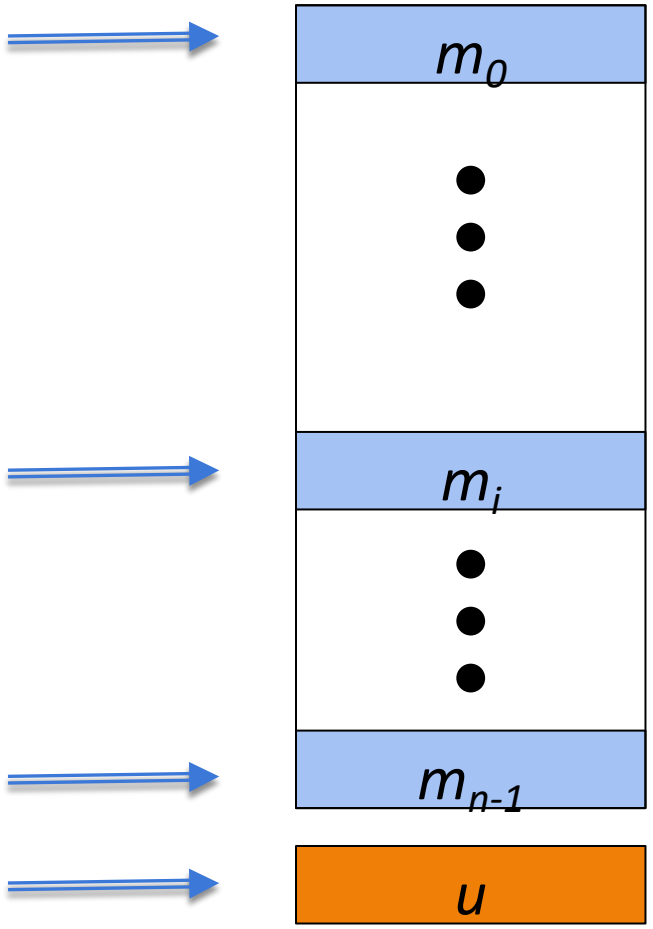

E2E Memory Network for Contextual NLU

Chen et al., End-to-End Memory Networks with Knowledge Carryover for Multi-Turn Spoken Language Understanding, Interspeech 2016.

1. Sentence Encoding

$$m_i = \mathrm{RNN}_{\mathrm{mem}}(x_i)$$
$$u = \mathrm{RNN}_{\mathrm{in}}(c)$$

2. Context Attention

$$p_i = \mathrm{softmax}(u^T m_i)$$

3. Context Encoding

$$h = \sum_i p_i m_i \quad o = W_{\mathrm{kg}}(h + u)$$

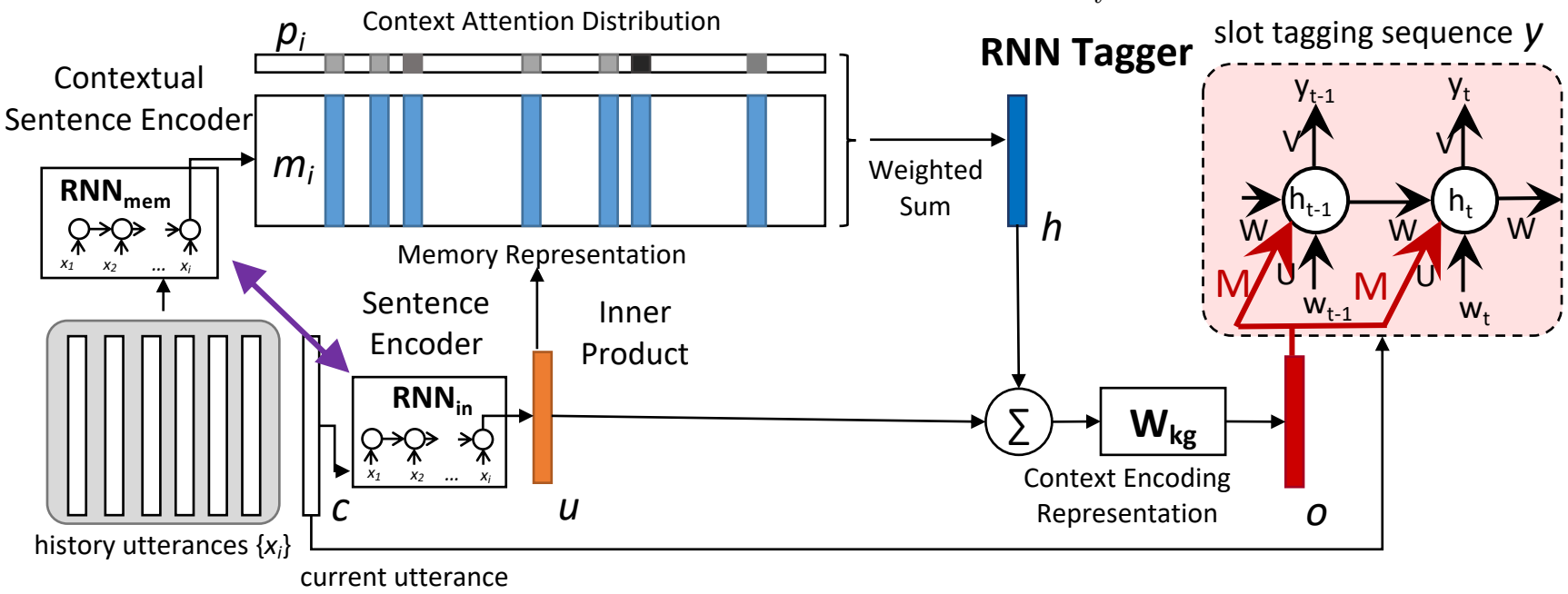

Idea: additionally incorporating contextual knowledge during slot tagging
→ track dialogue states in a latent way

Analysis of Attention

U: "i d like to purchase tickets to see deepwater horizon" → 0.69

S: "for which theatre"

U: "angelika"

S: "you want them for angelika theatre?"

U: "yes angelika"

S: "how many tickets would you like ?"

U: "3 tickets for saturday"

S: "What time would you like ?" → 0.13

U: "Any time on saturday is fine"

S: "okay , there is 4:10 pm , 5:40 pm and 9:20 pm" → 0.16

U: "Let's do 5:40"

Outline for Today

- Sequence-to-Sequence Models
- Beam Search
- Sequence-to-Sequence Models for Response Generation
- Limitations of Sequence-to-Sequence Models
- Attention
- Applications of Attention in NLP